How to **connect** and **set up** your new audio/video receiver

KENWOOD

VR-2090/VR-2080

Connection and Setup Guide

Connecting and Setting Up Your New Kenwood Audio-Video Receiver

Welcome to the Connection and Setup Guide for your new Kenwood Audio-Video Receiver. This manual covers two models:

The **VR-2080** offers two kinds of 5.1-channel digital decoding:

- Dolby® Digital, for the hundreds of currently available Dolby Digital DVDs and LaserDiscs.
- DTS™, a well-established multichannel format in movie theaters, is available for home theater on LaserDisc, and will be on DVD by the end of 1998.

Use it to connect all your current audio and video components—the VR-2080 has a variety of connection jacks so you can customize your entertainment setup.

It also includes Kenwood's remarkable PowerPad LCD remote—a graphical user interface without having to use your TV!

The **VR-2090** offers all the features of the 2080, and adds dual-room/dual-source operation—you play 2 different A/V sources independently in 2 different rooms!

Other advanced features include 5 S-Video inputs and an optical digital output for digital dubbing to MiniDisc. For a match made in "dual-zone heaven," get the CD-2280M changer.

DOLBY DIGITAL DOLBY SURROUND PRO • LOGIC
Manufactured under license from Dolby Laboratories. "Dolby", "Pro Logic", "AC-3", and the double-D symbol are trademarks of Dolby Laboratories. Confidential Unpublished Works. © 1992-1998 Dolby Laboratories. All rights reserved.

DIGITAL dts SURROUND
Manufactured under license from DTS, Inc. "DTS", "digital surround", and "coherent acoustics" are trademarks of DTS, Inc. © 1997 DTS, Inc. All rights reserved.

makita JDS "The Home of Automation" TECHNOLOGIES X-10 NILES Xantech CUSTOM INSTALLATION PRODUCTS
The above are additional trademarked names appearing in this manual. All other products named are trademarks of their respective companies.

Safety Precautions

Prevent electric shock:

- Do not expose your receiver to rain or moisture.
- Do not remove the cover (or back). There are no user-serviceable parts inside. If your receiver requires repair, take it to an authorized service outlet.
- The following icons indicate the presence of uninsulated dangerous voltage that may be of sufficient magnitude to cause electric shock:

CAUTION
RISK OF ELECTRIC SHOCK
DO NOT OPEN

Unpacking

Unpack your new receiver carefully and make sure that all the accessories are present:

PowerPad Remote

Batteries

AM Loop Antenna

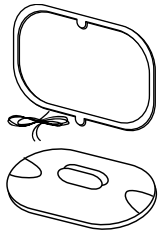

AM Antenna Base

FM Antenna

If any accessories are missing, or if the receiver is damaged or fails to operate, notify your dealer immediately. If your receiver was shipped to you directly, notify your shipper immediately. Kenwood recommends that you retain the original carton and packing materials in case you need to move or ship the receiver in the future.

Table of Contents

Chapter One: Connecting Your Components 1

Noting Your Components 3

Connecting Your Speakers. 4
- To Connect Front Speakers Only:
- To Connect Front and Surround Sound Speakers:
- What if I Have a Powered Subwoofer?
- What if I Have an Amplifier?

Connecting Your TV. 8
- To Connect a TV:
- What if I Want to Watch TV without Turning on the Receiver?

Connecting Your Cable TV or Satellite Tuner . 10
- To Connect a Cable TV Tuner with a Composite (RCA) Video Output:
- To Connect a Cable TV Tuner without a Composite (RCA) Video Output:
- To Connect a Satellite Tuner:

Connecting Your VCR(s) 12
- To Connect a Primary VCR:
- To Connect a Second VCR:

Connecting Your Primary CD Player 14
- What if I Have a Video CD-Compatible CD Player?
- To Connect a Kenwood 200-Disc CD Changer:
- To Connect Any Other Primary CD Player or Changer:
- To Connect a Second CD Player:

Connecting Your DVD Player. 16
- To Connect a DVD Player:

Connecting Your MD Recorder or Primary Tape Deck. 18
- To Connect an MD Recorder:
- To Connect a Primary Tape Deck:
- To Connect a Secondary Tape Deck

Connecting Your Second CD Player or Tape Deck. 20
- To Connect a Second CD Player:
- To Connect a Second Tape Deck:

Connecting Your Laser Disc Player (without AC-3 RF Output). 22
- To Connect a PCM Digital Output Laser Disc Player:

Connecting Your Laser Disc Player (with AC-3 RF Output) 24
- To Connect an AC-3 RF Output Laser Disc Player:

Connecting Your Turntable/Record Player. . . . 26
- To Connect a Turntable/Record Player:

Connecting a Camcorder or Additional VCR . . 27
- To Connect a Camcorder or Additional VCR:
- Can I Connect an Additional VCR Permanently?

What if I Have Several Kenwood Components (System Control Chaining)?. 28
- An Example of SL16 Chained Connections:
- An Example of XS8 Chained Connections:

Connecting the Antennas 29
- AM Loop Antenna
- FM Indoor Antenna
- FM Outdoor Antenna
- What if I Have Cable Radio?

Chapter Two: Setting Up PowerPad . . 30

Installing the Batteries 30

Selecting the Model Type 31
- Resetting PowerPad

Navigating PowerPad Interface. 31

Understanding the Menu Structure 32
- Selecting the Main Menu
- Selecting and Using Main Menu Tabs

Setting Up Speakers. 33
SP Selection
SP Distance
SP Level
Surr. SP Type

Identifying Components For PowerPad Control 35
How Do I Identify Components?
What if I Have a Kenwood 200-Disc CD Changer?
What if I Connected a CD to the Jack Set PowerPad Calls Tape2?
What if My Component is not on the Codes List? What if None of the Codes from the List Work?
How Do I Replace a Setup Code with a New One?
How Do I Delete Setup Codes?

Storing Radio Stations in Memory (optional) . 37
Storing Stations Manually
Storing RDS Stations Automatically (VR-2090 Only)

Chapter Three: Setting Up Multiple Zones (VR-2090 Only) 39

Making Connections 40
Understanding how the VR-2090 Powers Speakers
Scenario One: Surround Sound/Stereo in Zone A and Stereo in Zone B (Using the VR-2090's Speaker B Outputs)
Scenario Two: Surround Sound in Zone A and Stereo in Zone B (Using a Stereo Amplifier in Zone B)
Scenario Three: Surround Sound in Both Zones (Using an Additional Amplifier or a Second Receiver)
Connecting a Second TV/Monitor
Connecting an External Infrared Receiver (VR-2080 and VR-2090)
To Connect an External Infrared Receiver:
Connecting and Setting Up IR Repeaters, On/Off Sensors, or Relay Controls
Relay Controls
IR Repeaters
TV ON/OFF Sensors

Setting Up the PowerPad 45
What if I Don't Want to Carry the PowerPad from Zone to Zone?

Chapter Four: Warnings and Specifications 46
Warnings
VR-2090 Specifications
VR-2080 Specifications

Chapter One: Connecting Your Components

Welcome to the Kenwood VR-2080/VR-2090 Connection and Setup Guide. This chapter guides you through connecting your home entertainment components to your new Kenwood audio-video receiver.

Once all your components are connected, you can set up the PowerPad (see Chapter Two).

Refer to the following pages for details on connecting these components:

Speakers	page 4
TV	page 8
VCR(s)	page 12
CD Player, Kenwood 200-Disc Changer	page 12
DVD Player	page 16
MD Recorder	page 18
Tape Deck(s)	page 18
LD Player	page 22
Turntable	page 26
Camcorder/Second VCR	page 27
Antennas	page 29

All necessary cables should be provided with your home entertainment component (not with your new receiver). If you do not have the correct cables, you may purchase these cables from any home entertainment store or by visiting the Kenwood USA Web site: www.kenwoodusa.com.

If you purchase a coaxial digital cable, be sure to use a high-quality composite video cable, not a standard audio cable.

Do not plug in the receiver or any other component to AC power until all connections have been made. Once all components have been connected, you may plug them in and provide power.

You can connect any video game that supports standard RCA audio and composite video connections to any available video jack set (including the AUX jack set on the front of the receiver).

Your new receiver requires adequate ventilation to perform reliably. Be sure not to block the ventilation area on the top or back of the receiver with another component. These areas should be at least 6 inches from any obstruction.

Before You Begin

This manual covers the most common and standard connections to the receiver. Because of its versatility, you may decide to connect your components differently.

Before making any video connections to the VR-2090:

- You can use either S-Video or standard composite (RCA) video connections with the VR-2090.
- If all of your video components and TV have S-Video connectors, we suggest that you use them exclusively, since it will provide superior video performance.
- If only some of your video components and TV have S-Video connectors, you can still use them for those components and the TV. Use the composite connectors for your components that don't have S-Video connectors. In this case you'll also have to connect the receiver's composite Video Monitor output to your TV for your non S-Video components.
- If your TV doesn't have S-Video connectors, you can't use S-Video connections for any of your video components. Use the composite connectors exclusively.
- If you plan on using the VR-2090 in a Dual-Zone application (see Chapter Three), you must use the composite video connections in addition to any S-Video connections. Only video sources connected with composite connectors can be viewed in the second zone.

The following diagram shows the entire back of the VR-2090.

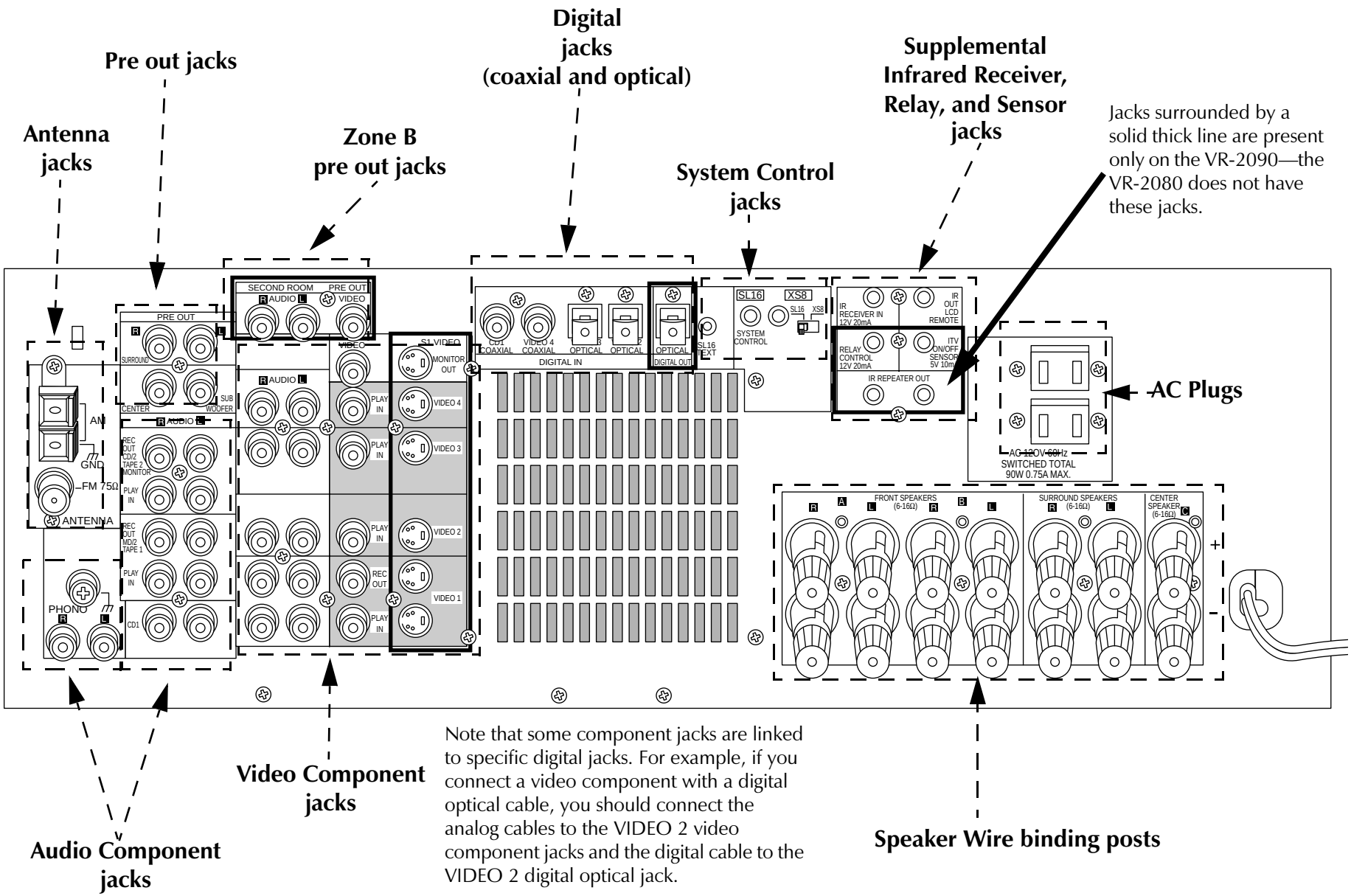

Note that some component jacks are linked to specific digital jacks. For example, if you connect a video component with a digital optical cable, you should connect the analog cables to the VIDEO 2 video component jacks and the digital cable to the VIDEO 2 digital optical jack.

Noting Your Components

Jack Set	Component	Manufacturer	Model #	Setup Code
Phono				
CD1				
MD/Tape 1				
CD2/Tape2 Monitor				
Video (TV1 on PowerPad)				
Video1				
Video2				
Video3				
Video4				

Use this table and the diagram on the preceding page to plan your connections before you make them, or use it to record your connections as you make them. If you will be connecting a DVD player or other component with a digital output, please refer to the following chart before choosing a video jack set:

If your digital cable is…	Choose this jack set…
coaxial	VIDEO4
optical	VIDEO2 or 3

You will need this information later, when you set up your PowerPad (see “Identifying Components For PowerPad Control” on page 35). Recording this information now will save you additional trips behind your home entertainment cabinet. You will fill in the Setup Code column when you are setting up PowerPad.

Connecting Your Speakers

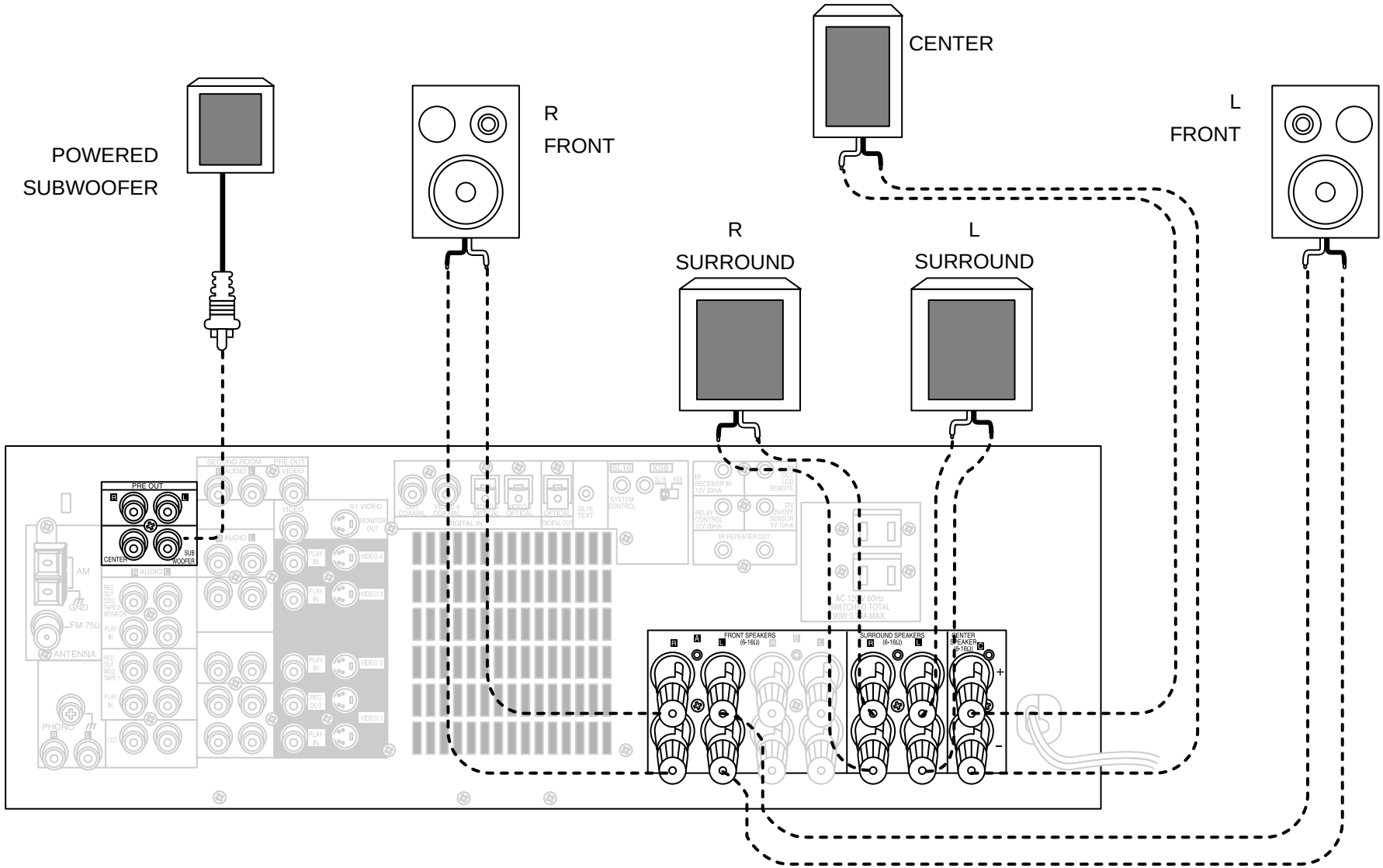

Connecting Your Speakers, continued

Do not plug in the receiver to AC power until all connections have been made.

To Connect Front Speakers Only:

If you only intend to listen to stereo sound (as opposed to surround sound), you may simply connect a single pair of speakers. To do so:

Using Banana Plugs:

1. Tighten the speaker wire binding posts. If you do not tighten the posts, they will not conduct sound properly to the speakers.
2. Insert the plug from the positive jack on the RIGHT FRONT speaker into the pin jack on the positive RIGHT FRONT post. Repeat for the negative plug.
3. Repeat step 2 for the positive and negative wires on the LEFT FRONT speaker.

Using Bare Wires

1. Loosen the speaker wire binding posts.
2. Insert the wire from the positive jack on the RIGHT FRONT speaker into the U-shaped slot in the base of the positive RIGHT FRONT post. Lay the wire to the right of the post; that way, when you tighten the binding post, it will naturally twist the wire into the best connection. Tighten the post. Repeat for the negative wire on the RIGHT FRONT speaker.
3. Repeat step 2 for the positive and negative wires on the LEFT FRONT speaker.

To Connect Front and Surround Sound Speakers:

To listen to the full surround sound that this receiver can put out, connect front speakers, and center, left surround, and right surround speakers. To do so:

Using Banana Plugs:

1. Tighten the speaker wire binding posts. If you do not tighten the posts, they will not conduct sound properly to the speakers.
2. Follow the steps under “To Connect Front Speakers Only” on this page to connect the RIGHT and LEFT FRONT speakers.
3. Insert the plug from the positive jack on the CENTER speaker into the pin jack on the positive CENTER post. Repeat for the negative plug.
4. Insert the plug from the positive jack on the RIGHT SURROUND speaker into the pin jack on the positive RIGHT SURROUND post. Repeat for the negative plug.
5. Repeat step 4 for the positive and negative wires on the LEFT SURROUND speaker.

Using Bare Wires

1. Loosen the speaker wire binding posts.
2. Follow the steps under “To Connect Front Speakers Only” on this page to connect the RIGHT and LEFT FRONT speakers.
3. Insert the wire from the positive jack on the CENTER speaker into the U-shaped slot in the base of the positive CENTER post.

   Tighten the post. Repeat for the negative wire.
4. Insert the wire from the positive jack on the RIGHT SURROUND speaker into the U-shaped slot on the base of the positive RIGHT SURROUND post. Tighten the post. Repeat for the negative wire.
5. Repeat step 4 for the positive and negative wires on the LEFT SURROUND speaker.

What if I Have a Powered Subwoofer?

Simply connect the subwoofer’s audio cable to the receiver’s subwoofer pre out jack as shown to the left.

Never short circuit the + and - speaker wires.

Do not switch the left and right speaker wires or swap the + and - wires on the binding posts.

The speakers must have a nominal impedance of between 6Ω and 16Ω.

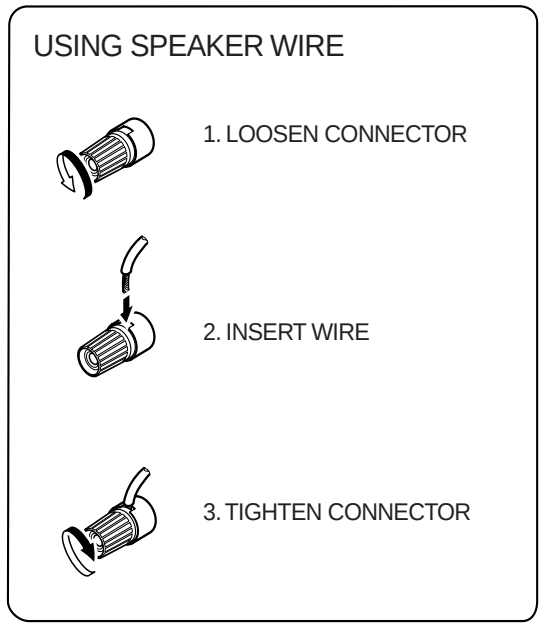

What if I Have an Amplifier?

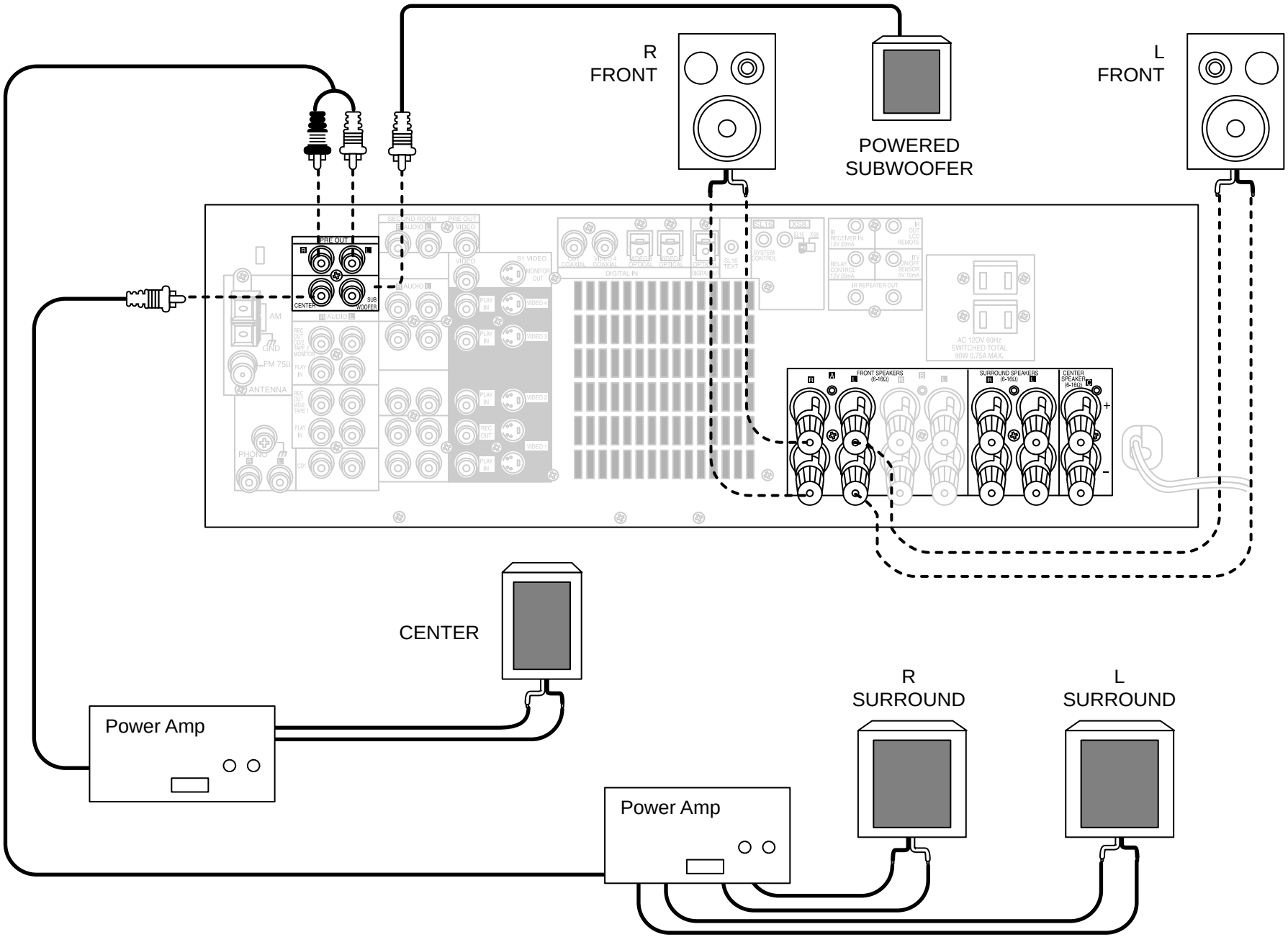

What if I Have an Amplifier?, continued

You can use supplemental power amplifiers for the center and surround channels instead of the receiver's built-in amplifiers. For example, if you are using wireless surround speakers, you'll need to use supplemental amplifiers for the surround channels.

Do not plug in the amplifiers or the receiver to AC power until all connections have been made.

To connect supplemental power amplifiers:

1. Connect the left and right front speakers as described in “To Connect Front Speakers Only:” on page 5.
2. Using an RCA audio cable (not supplied), connect the receiver's PRE OUT CENTER jack to the amplifier's input jack as shown above.
3. Connect the center speaker to the power amplifier according to the amplifier's instruction manual.
4. Using RCA audio cables (not supplied), connect the receiver's PRE OUT SURROUND L and R jacks to the amplifier's input jacks as shown above.
5. Connect the surround speakers to the power amplifier according to the amplifier's instruction manual.

Connecting Your TV

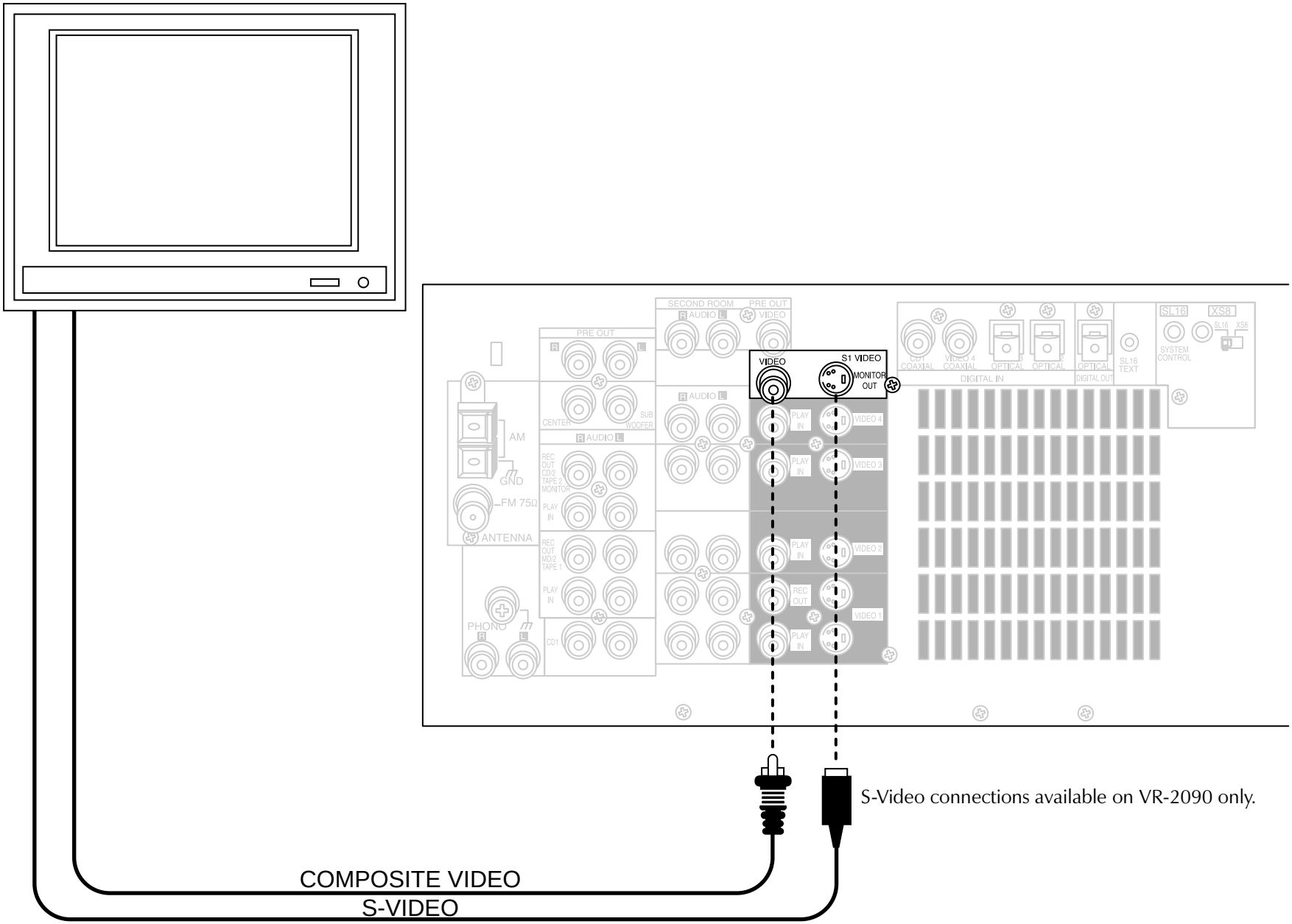

Connecting Your TV, continued

Do not plug in the receiver or components to AC power until you have connected all your components.

This section focuses on the connections from your TV to the VR-2080/VR-2090. Please refer to your TV's instructions for more detail about its connection jacks and capabilities.

The instructions in this section show one of several possible variations on connecting your TV. For further assistance on optional configurations, contact the store where you purchased your receiver.

These instructions describe how to set up your TV as a monitor for the other video components you connect (such as a VCR or DVD player).

To Connect a TV:

1. Review the information under "Before You Begin" on page 1. It contains important notes about the types of video connections you can make.
2. Connect a video cable from your TV's Video IN jack to the receiver's MONITOR OUT jack as shown above.
3. Go to "Noting Your Components" on page 3 and note which jack you used to connect your TV. In addition, note the brand name and model number of the TV.

If you previously connected your TV directly to your VCR, you must now connect it through your new receiver.

What if I Want to Watch TV without Turning on the Receiver?

The connection described here sets your TV up as a monitor you can use to view media played on your other video components (such as a VCR or DVD player). You can still watch TV without having to use the receiver.

Connecting Your Cable TV or Satellite Tuner

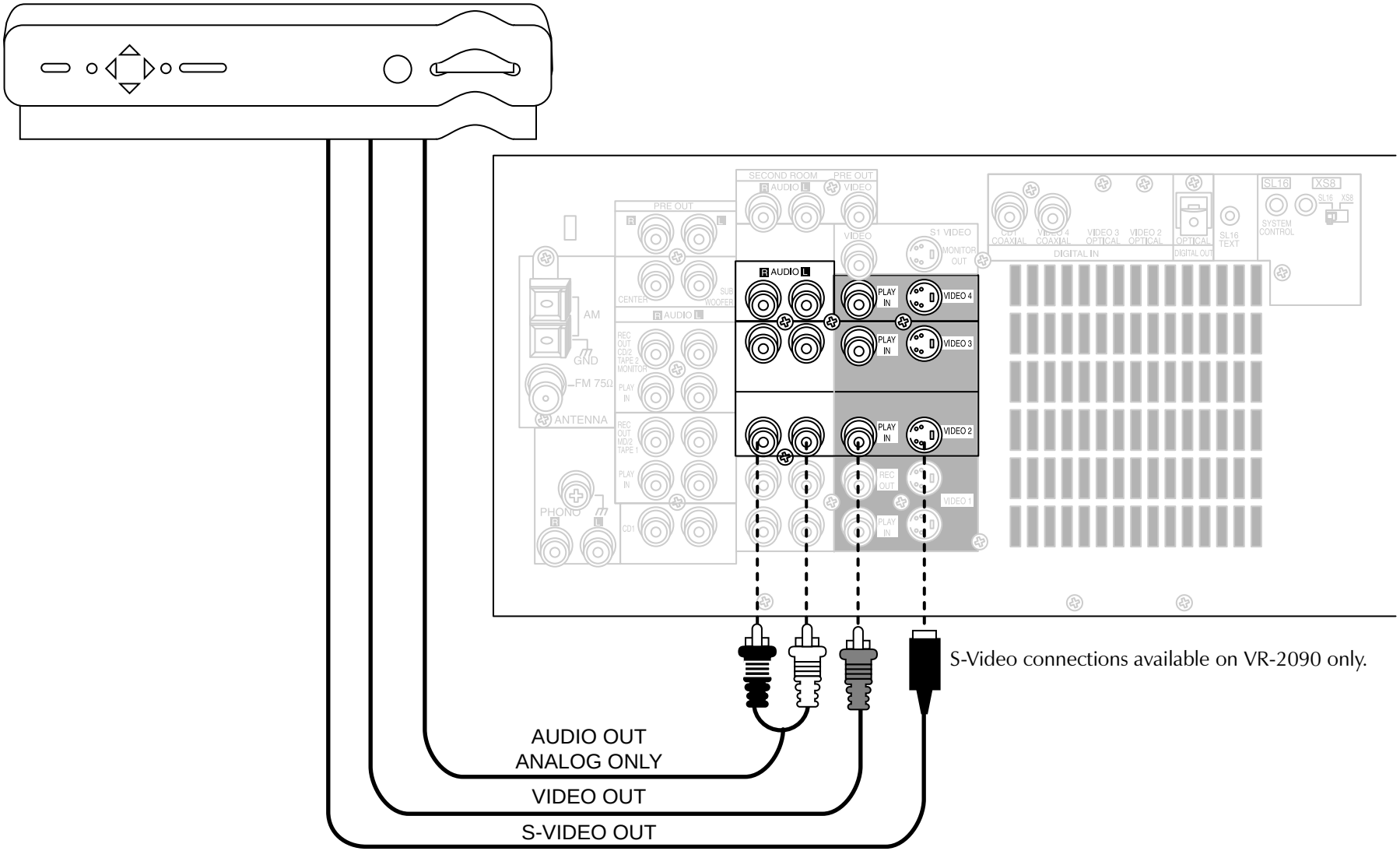

Connecting Your Cable TV or Satellite Tuner, continued

Do not plug in the receiver or components to AC power until you have connected all your components.

This section focuses on the connections from your cable or satellite tuner to the VR-2080/VR-2090. Please refer to your tuner's instructions for more detail about its connection jacks and capabilities.

The instructions in this section show one of several possible variations on connecting your tuner. For further assistance on optional configurations, contact your cable or satellite provider.

To Connect a Cable TV Tuner with a Composite (RCA) Video Output:

1. Review the information under "Before You Begin" on page 1. It contains important notes about the types of video connections you can make.
2. Connect the audio and video cables from the cable tuner's Audio and Video Out jacks to the receiver's Video 2, Video 3, or Video 4 Play In jacks as shown to the left.
3. Go to "Noting Your Components" on page 3 and note which jack you used to connect your tuner. In addition, note the brand name and model number of the tuner.

To Connect a Cable TV Tuner without a Composite (RCA) Video Output:

1. Review the information under "Before You Begin" on page 1. It contains important notes about the types of video connections you can make.
2. Connect the audio cables from the cable tuner's Audio Out jacks to the receiver's Video 2, Video 3, or Video 4 Play In jacks as shown to the left.

   Leave the cable tuner's video out (RF jack) connected directly to your VCR or TV (wherever you already have it connected). See "How Do I Operate Components?" on page 24 of the *Users' Guide* for details about using this setup.
3. Go to "Noting Your Components" on page 3 and note which jack you used to connect your tuner. In addition, note the brand name and model number of the tuner.

To Connect a Satellite Tuner:

1. Review the information under "Before You Begin" on page 1. It contains important notes about the types of video connections you can make.
2. Connect the audio and video cables from the satellite tuner's Audio and Video Out jacks to the receiver's Video 2, Video 3, or Video 4 Play In jacks as shown to the left.
3. Go to "Noting Your Components" on page 3 and note which jack you used to connect your tuner. In addition, note the brand name and model number of the tuner.

Connecting Your VCR(s)

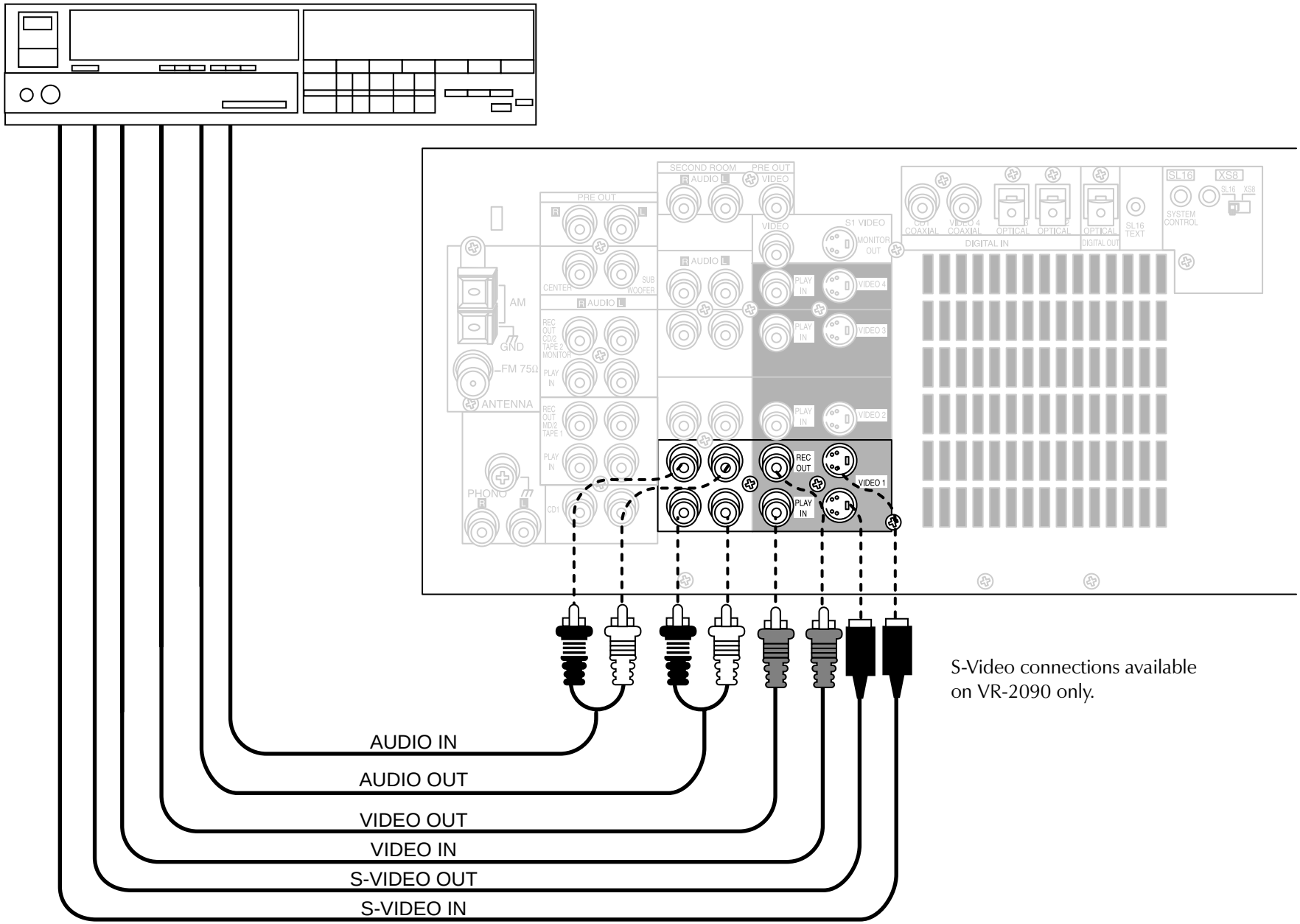

Connecting Your VCR(s), continued

Do not plug in the receiver to AC power until you have connected all your components.

This section focuses on the connections from your VCR to the VR-2090/VR-2080. Please refer to your VCR's instructions for more detail about its connection jacks and capabilities.

The instructions in this section show one of several possible variations on connecting your VCR. For further assistance on optional configurations, contact the store where you purchased your receiver.

To Connect a Primary VCR:

1. Review the information under "Before You Begin" on page 1. It contains important notes about the types of video connections you can make.
2. Connect the audio and video cables from the VCR's Audio and Video jacks to the receiver's VIDEO 1 REC OUT and PLAY IN jacks as shown above.

   Be sure to connect the VCR Video IN cable to the jack labeled REC OUT and the VIDEO OUT cable to the jack labeled PLAY IN.
3. Go to "Noting Your Components" on page 3 and note which jack you used to connect your VCR. In addition, note the brand name and model number of the VCR.

To Connect a Second VCR:

1. Review the information under "Before You Begin" on page 1. It contains important notes about the types of video connections you can make.
2. Connect the audio and video cables from the VCR's Audio and Video jacks to the receiver's VIDEO 2 jacks.

   There are no REC OUT jacks for Video 2—the second VCR will be play-only and cannot record.
3. Go to "Noting Your Components" on page 3 and note which jack you used to connect your VCR. In addition, note the brand name and model number of the VCR.

Connecting Your Primary CD Player

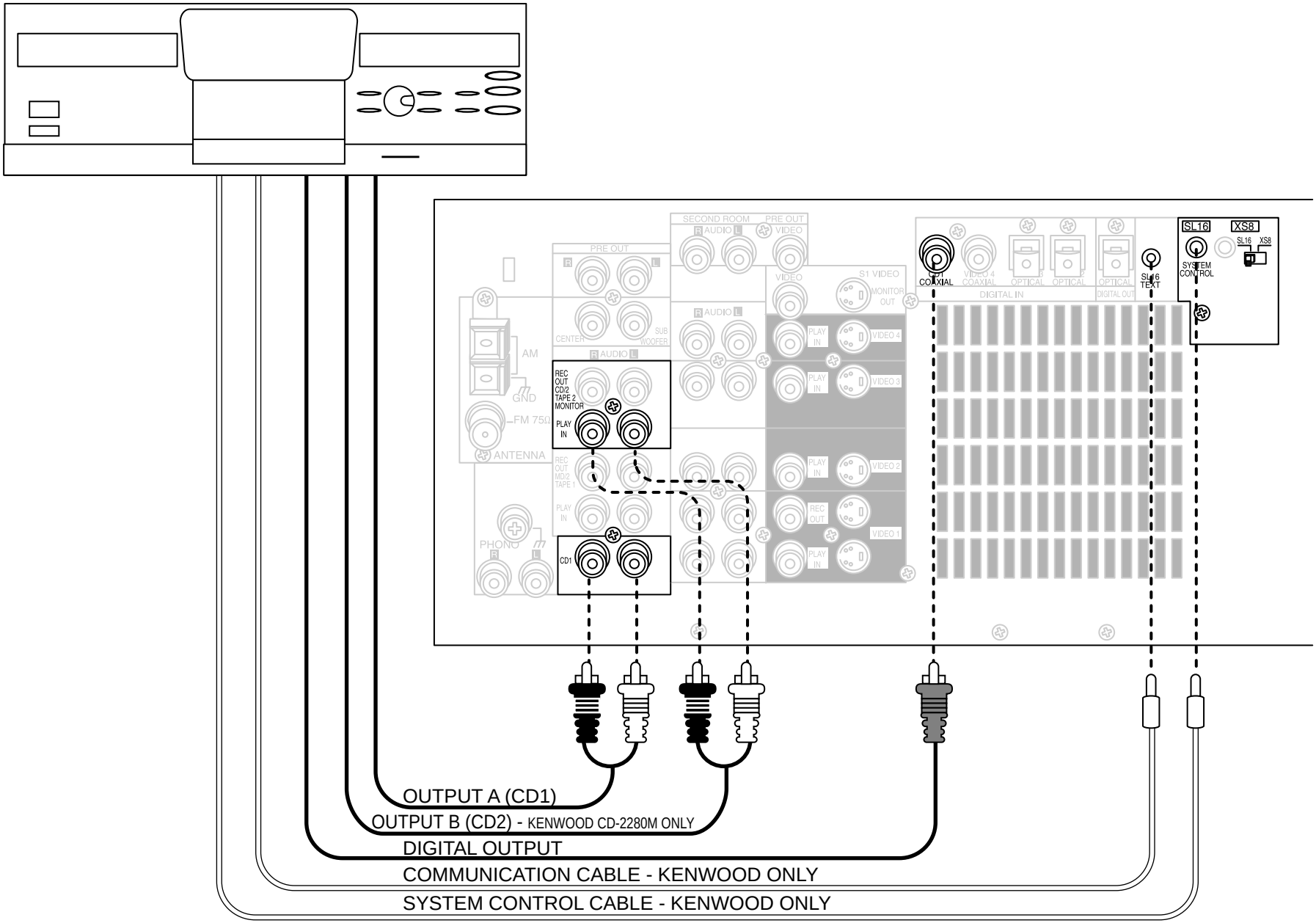

Connecting Your Primary CD Player, continued

Do not plug in the receiver to AC power until you have connected all your components.

This section focuses on the connections from your 200-Disc CD Changer to the VR-2090/VR-2080. Please refer to your changer's instructions for more detail about its connection jacks and capabilities.

Each set of instructions in this section shows one of several possible variations on connecting your CD player(s). For further assistance on optional configurations, contact the store where you purchased your CD player(s).

The illustration shows a Kenwood 200-Disc CD Changer. Your CD player may look different.

The Kenwood CD-2280M 200-Disc Changer contains two CD transports. You must connect this component as though it were two CD players.

What if I Have a Video CD-Compatible CD Player?

Connect the audio and video cables from the CD player to any unused Video jack set.

Do not connect the system control cable in this instance.

To Connect a Kenwood 200-Disc CD Changer:

1. Connect one set of audio cables from the 200-Disc Changer to the receiver's CD1 jacks. If you have a VR-2090 and CD-2280M, connect the other set of audio cables from the changer to the receiver's CD2/Tape 2 Monitor PLAY IN jacks as shown above.
2. Connect the coaxial digital cable from the changer to the receiver's CD1 COAXIAL jack as shown above.
3. Connect the system control cable from the changer to the SYSTEM CONTROL jack as shown to the left.

   Be sure that the SL16/XS8 switch on both the changer and the receiver is set to SL16.

   If you are connecting more than one Kenwood component with a system control cable, see "What if I Have Several Kenwood Components (System Control Chaining)?" on page 28 for more information.
4. Connect the SL16 text cable from the changer to the receiver's SL16 TEXT jack as shown above.
5. Go to "Noting Your Components" on page 3 and note which jacks you used to connect your CD changer. In addition, note the brand name and model number of the CD Changer.

To Connect Any Other Primary CD Player or Changer:

1. Connect the audio cables from the CD player's audio jacks to the receiver's CD1 jack set as shown above.
2. Connect the coaxial digital cable from the CD player's digital jack to the receiver's CD1 COAXIAL jack as shown above.
3. If you are connecting a Kenwood CD Player with system control, connect the system control cable from the CD player to the system control jack as shown to the left.

   Be sure that the SL16/XS8 switch on both the player/changer and the receiver is set appropriately.

   If you are connecting more than one Kenwood component with a system control cable, see "What if I Have Several Kenwood Components (System Control Chaining)?" on page 28 for more information.
4. Go to "Noting Your Components" on page 3 and note which jacks you used to connect your CD changer. In addition, note the brand name and model number of the CD player or changer.

To Connect a Second CD Player:

See "Connecting Your Second CD Player or Tape Deck" on page 20.

Connecting Your DVD Player

Note that video component jacks are linked to specific digital jacks. For example, if you connect a DVD player with a digital optical cable, you should connect the analog cables to the VIDEO 2 video component jacks and the digital cable to the VIDEO2 digital optical jack.

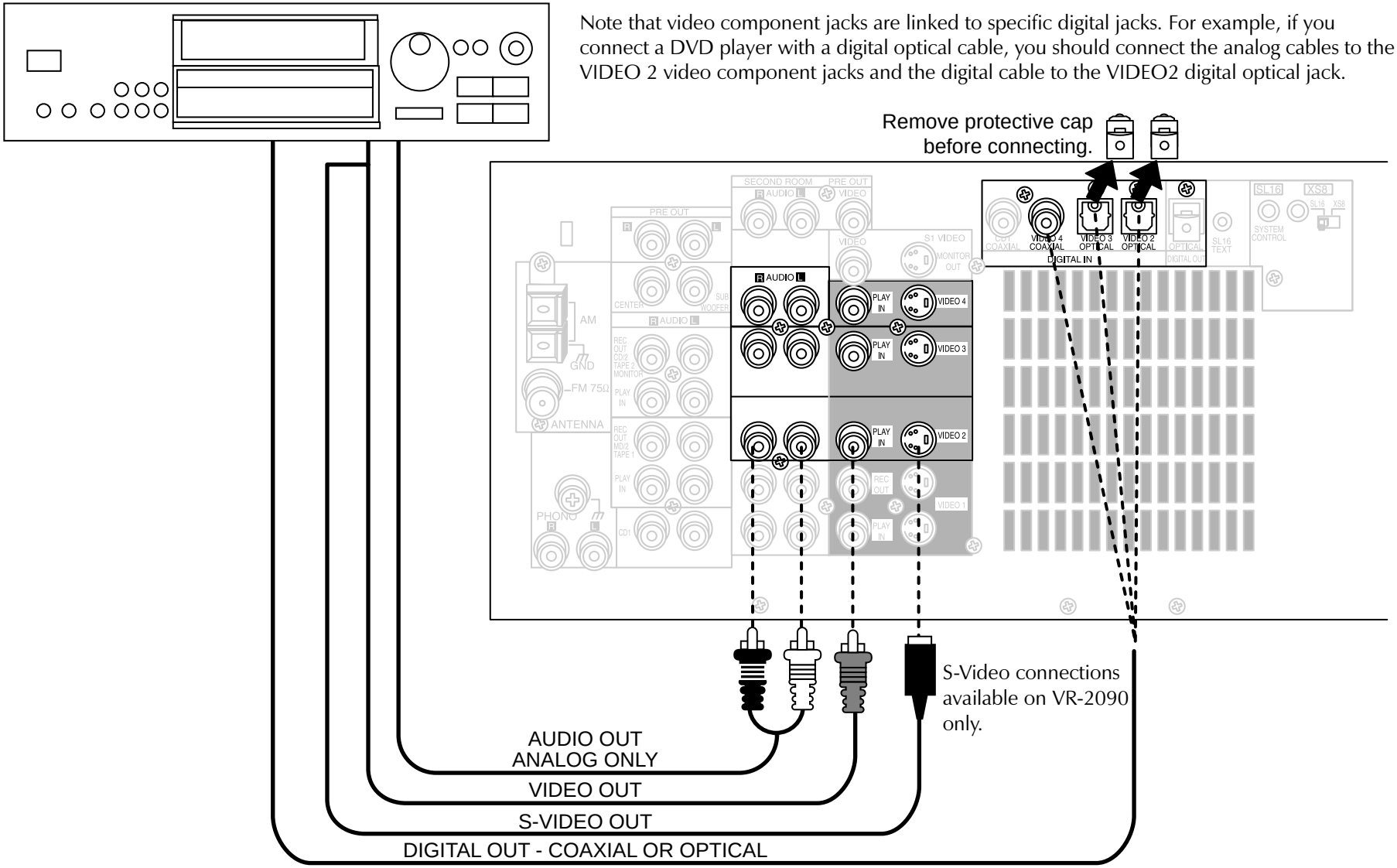

Connecting Your DVD Player, continued

Do not plug in the receiver to AC power until you have connected all your components.

This section focuses on the connections from your VCR to the VR-2090/VR-2080. Please refer to your VCR's instructions for more detail about its connection jacks and capabilities.

The instructions in this section show one of several possible variations on connecting your DVD player. For further assistance on optional configurations, contact the store where you purchased your receiver.

To Connect a DVD Player:

1. Review the information under "Before You Begin" on page 1. It contains important notes about the types of video connections you can make.
2. Look at the digital cable that came with your DVD player. Use the table below to choose a jack set:

If your digital cable is…	Choose this jack set…
coaxial	VIDEO4
optical	VIDEO2 or 3

Note that the jack sets are linked, even though they are not adjacent. You **must** connect all of the cables from your DVD player to a linked jack set. For example, if you connect the analog cables to VIDEO2 and the digital optical cable to VIDEO3, your DVD player will not work correctly.

3. Connect the audio and video cables from the DVD's Audio and Video jacks to the receiver's PLAY IN jacks as shown to the left.
4. Connect the digital cable (either coaxial or optical) from the DVD's digital jack to the appropriate digital jack on the receiver as shown to the left.

   The illustration shows two digital connections, one for coaxial connection and one for optical connection. Your DVD player supports one or the other of these connection methods—**do not** connect both.

   If you use the optical digital cable, be sure to remove the protective cover from the optical jack before connecting.
5. Go to "Noting Your Components" on page 3 and note which jacks you used to connect your DVD player. In addition, note the brand name and model number of the DVD player.

Connecting Your MD Recorder or Primary Tape Deck

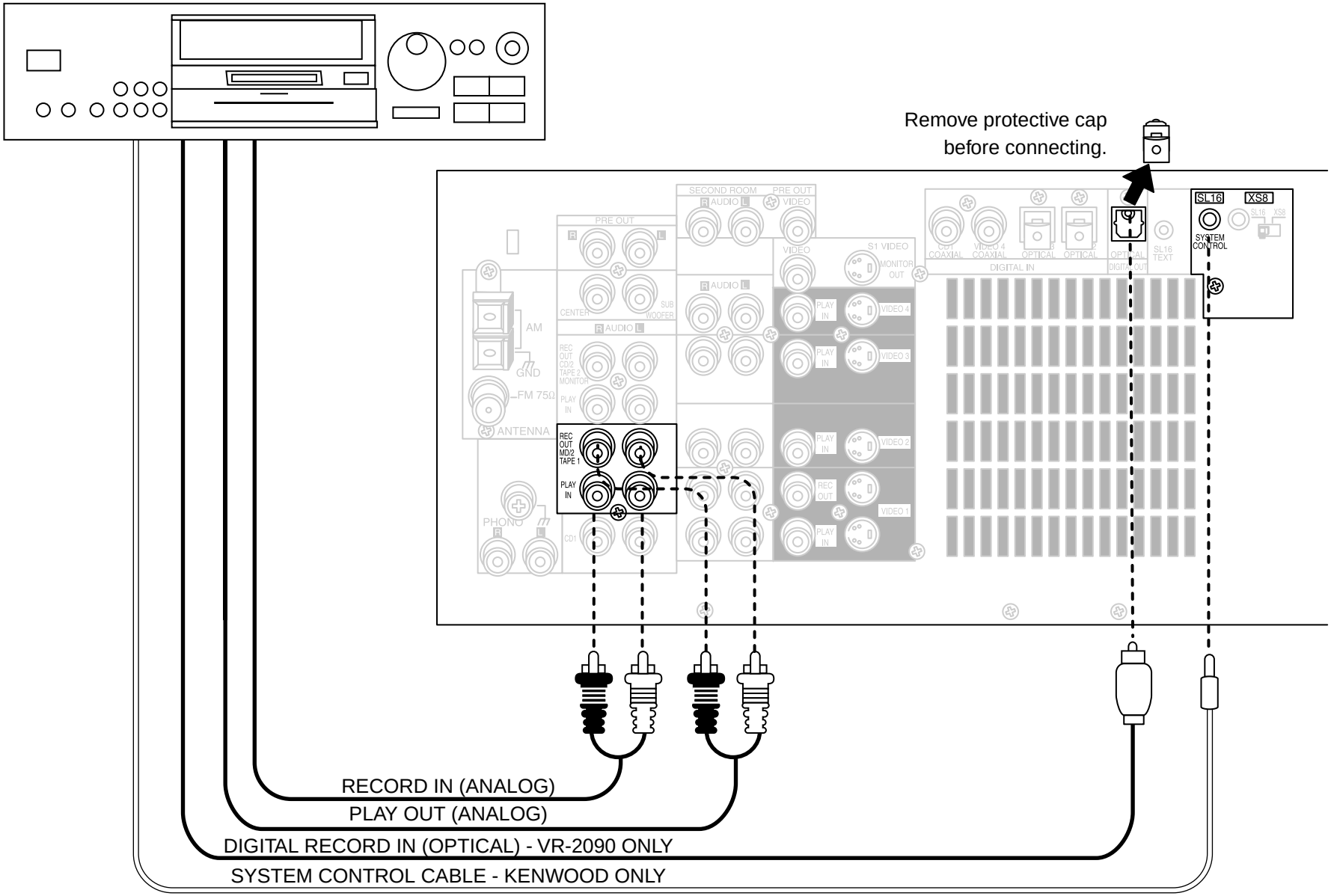

Connecting Your MD Recorder or Primary Tape Deck, continued

Do not plug in the receiver to AC power until you have connected all your components.

This section focuses on the connections from your MD recorder or tape deck to the VR-2090/VR-2080. Please refer to your MD recorder or tape deck's instructions for more detail about its connection jacks and capabilities.

Each set of instructions in this section shows one of several possible variations on connecting your MD recorder or tape deck. For further assistance on optional configurations, contact the store where you purchased your MD recorder or tape deck.

To Connect an MD Recorder:

1. Connect the audio cable from the MD recorder's PLAY OUT jacks to the receiver's MD/Tape1 PLAY IN jacks as shown to the left.
2. Connect the audio cable from the MD recorder's REC IN jacks to the receiver's REC OUT jacks, as shown to the left.
3. (VR-2090 only) Remove the cover from the receiver's OPTICAL DIGITAL OUT jack, then connect the optical digital cable from the MD recorder's REC IN jack to the receiver's OPTICAL DIGITAL OUT jack as shown to the left.
4. If you are connecting a Kenwood MD recorder, connect the system control cable from the MD recorder to the receiver.

   If you are connecting more than one Kenwood component with a system control cable, see "What if I Have Several Kenwood Components (System Control Chaining)?" on page 28.
5. Go to "Noting Your Components" on page 3 and note which jacks you used to connect your MD recorder. In addition, note the brand name and model number of the MD recorder.

To Connect a Primary Tape Deck:

1. Connect the audio cable from the tape deck's PLAY OUT jacks to the receiver's MD/Tape1 PLAY IN jacks as shown to the left.
2. Connect the audio cable from the tape deck's REC IN jacks to the receiver's MD/Tape1 REC OUT jacks as shown to the left.
3. If you are connecting a Kenwood tape deck with system control, connect the system control cable from the tape deck to the receiver.

   If you are connecting more than one Kenwood component with a system control cable, see "What if I Have Several Kenwood Components (System Control Chaining)?" on page 28 of the Connection and Setup Guide.
4. Go to "Noting Your Components" on page 3 and note which jacks you used to connect your tape deck. In addition, note the brand name and model number of the tape deck.

To Connect a Secondary Tape Deck

See "Connecting Your Second CD Player or Tape Deck" on page 20.

Connecting Your Second CD Player or Tape Deck

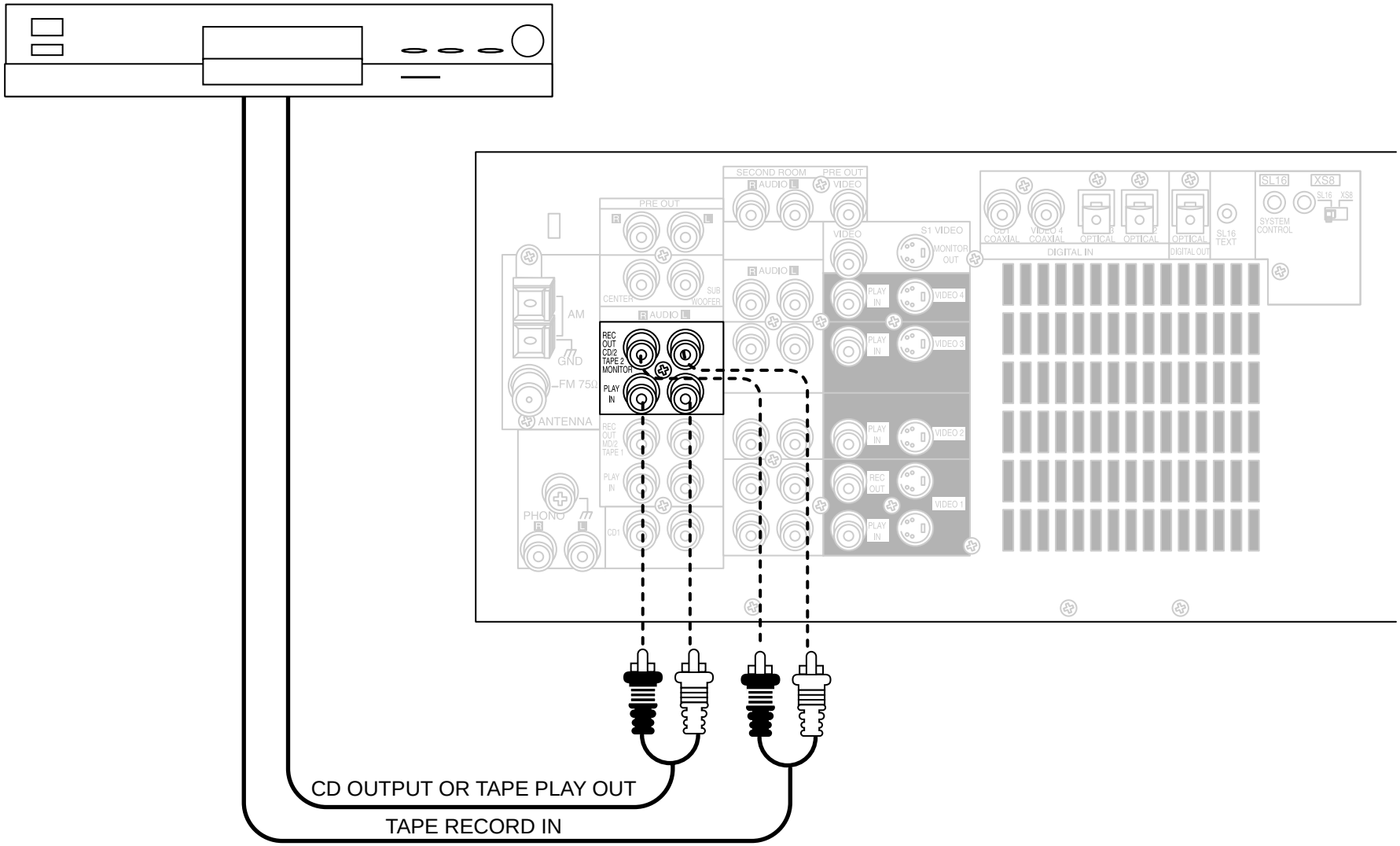

Connecting Your Second CD Player or Tape Deck, continued

Do not plug in the receiver to AC power until you have connected all your components.

This section focuses on the connections from your CD player or tape deck to the VR-2090/VR-2080. Please refer to your CD player or tape deck's instructions for more detail about its connection jacks and capabilities.

Each set of instructions in this section shows one of several possible variations on connecting your CD player or tape deck. For further assistance on optional configurations, contact the store where you purchased your CD player or tape deck.

Do not connect a system control cable from any unit connected via the CD2/TAPE2 MONITOR jacks.

To Connect a Second CD Player:

1. Connect the audio cables from the CD player's audio jacks to the receiver's CD2/Tape2 Monitor PLAY IN jack set as shown above.

   Do not connect the SL16 cable from the second CD player, even if it supports SL16 system control.
2. Go to "Noting Your Components" on page 3 and note which jacks you used to connect your CD changer. In addition, note the brand name and model number of the CD player or changer.

If you connect a second tape deck, you cannot connect a second CD player.

To Connect a Second Tape Deck:

1. Connect the audio cable from the tape deck's PLAY OUT jacks to the receiver's CD2/Tape2 Monitor PLAY IN jacks.
2. Connect the audio cable from the tape deck's REC IN jacks to the receiver's CD2/Tape2 Monitor REC OUT jacks.
3. Go to "Noting Your Components" on page 3 and note which jacks you used to connect your tape deck. In addition, note the brand name and model number of the tape deck.

If you connect a second CD player, you cannot connect a second tape deck.

Connecting Your Laser Disc Player (without AC-3 RF Output)

Note that video component jacks are linked to specific digital jacks. For example, if you connect a laser disc player with a digital optical cable, you should connect the analog cables to the VIDEO2 video component jacks and the digital cable to the VIDEO2 digital optical jack.

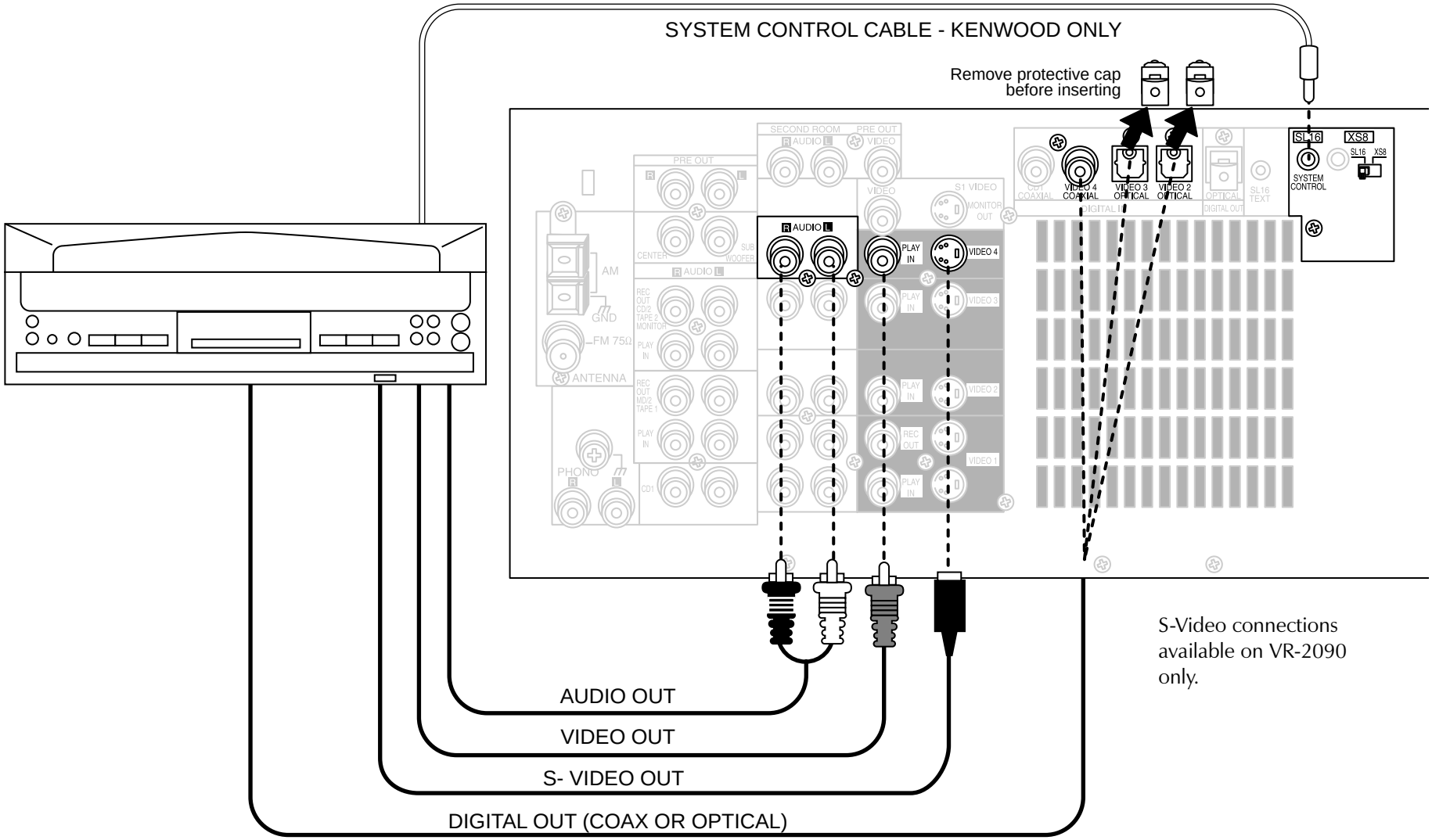

Connecting Your Laser Disc Player (without AC-3 RF Output), continued

Do not plug in the receiver to AC power until you have connected all your components.

These instructions describe how to connect a laser disc player with a PCM Digital Output. If your player has a Dolby Digital (AC-3) RF Out, see "Connecting Your Laser Disc Player (with AC-3 RF Output)" on page 24. Please refer to your laser disc player's instructions for more detail about its connection jacks and capabilities.

The instructions in this section show one of several possible variations on connecting your laser disc player. For further assistance on optional configurations, contact the store where you purchased your receiver.

To Connect a PCM Digital Output Laser Disc Player:

1. Review the information under "Before You Begin" on page 1. It contains important notes about the types of video connections you can make.
2. Look at the digital cable that came with your laser disc player. Use the table below to choose a jack set:

If your digital cable is…	Choose this jack set…
coaxial	VIDEO4
optical	VIDEO2 or 3

   Note that the jack sets are linked, even though they are not adjacent. You **must** connect all of the cables from your laser disc player to a linked jack set. If you connect the analog cables to VIDEO2 and the digital optical cable to VIDEO3, your laser disc player will not work correctly.
3. Connect the audio cables from the laser disc player's AUDIO OUT jacks to the receiver's AUDIO jacks as shown to the left.
4. Connect the video cable from the laser disc player's VIDEO OUT jack to the receiver's VIDEO PLAY IN jack as shown to the left.
5. Connect the digital cable (either coaxial or optical) from the laser disc player's digital jack to the appropriate digital jack on the receiver as shown to the left. Your laser disc player supports only one of the digital connection methods—**do not** connect both.

   If you use the optical digital cable, be sure to remove the protective cover from the optical jack before connecting.
6. If you are connecting a Kenwood laser disc player with system control, connect the system control cable from the laser disc player to the SYSTEM CONTROL jack as shown above.

   If you are connecting more than one Kenwood component with a system control cable, see "What if I Have Several Kenwood Components (System Control Chaining)?" on page 28 for more information.
7. Go to "Noting Your Components" on page 3 and note which jacks you used to connect your laser disc player. In addition, note the brand name and model number of the laser disc player.

Connecting Your Laser Disc Player (with AC-3 RF Output)

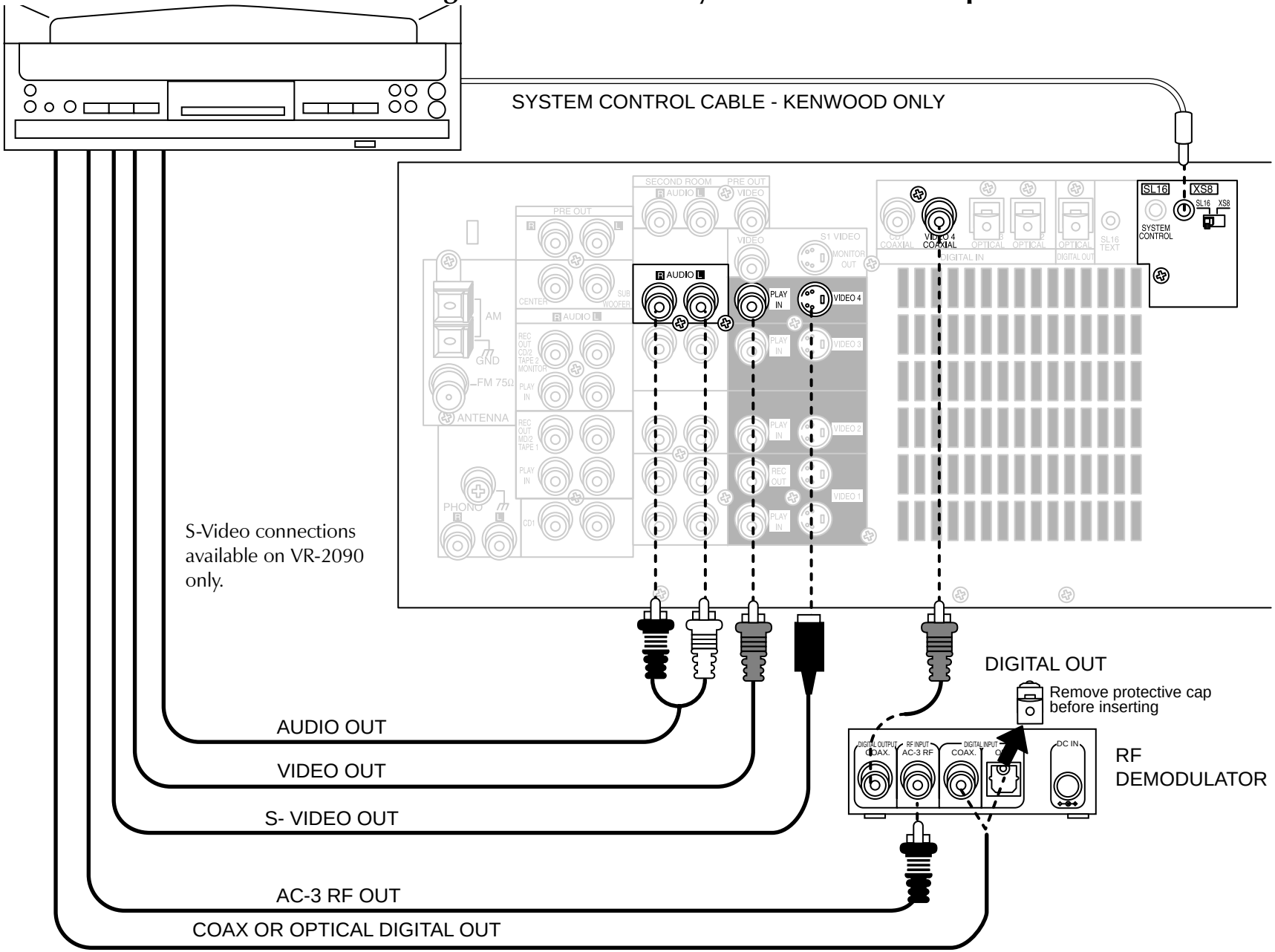

Connecting Your Laser Disc Player (with AC-3 RF Output), continued

Do not plug in the receiver to AC power until you have connected all your components.

You must purchase an RF Demodulator (DEM-9991D) if you plan to operate a player with a Dolby Digital (AC-3) RF Output with this receiver.

These instructions describe how to connect a laser disc player with an AC-3 RF Output. If your laser disc player does not have an AC-3 RF output, see "Connecting Your Laser Disc Player (without AC-3 RF Output)" on page 22. Please refer to your laser disc player's instructions for more detail about its connection jacks and capabilities.

The instructions in this section show one of several possible variations on connecting your laser disc player. For further assistance on optional configurations, contact the store where you purchased your receiver.

To Connect an AC-3 RF Output Laser Disc Player:

1. Review the information under "Before You Begin" on page 1. It contains important notes about the types of video connections you can make.
2. Connect the audio, video, and system control cables from the laser disc player to the receiver as described in "Connecting Your Laser Disc Player (without AC-3 RF Output)" on page 22, with the exception that you *must* use the VIDEO4 jack set, as that is the only set with a coaxial digital connection.

   Do not connect the digital cable (coaxial or optical) yet; it must be connected via the demodulator as described in the following steps.
3. Connect the AC-3 RF coaxial cable from the laser disc player's AC-3 RF OUT jack to the demodulator's RF INPUT AC-3 RF jack as shown to the left.
4. Connect the digital cable (either coaxial or optical) from the laser disc player's digital jack to the appropriate DIGITAL INPUT jack on the demodulator as shown to the left.
5. Connect the coaxial digital cable from the demodulator's DIGITAL OUTPUT COAX jack to the receiver's VIDEO4 COAXIAL jack.

   You cannot connect a laser disc player requiring a demodulator if you have connected a DVD player with a coaxial digital cable to the receiver.
6. Connect the demodulator's supplied 12V AC adapter to the DC IN jack on the demodulator. **Do not** plug the adapter into the wall until you have finished making all connections to the receiver.
7. Go to "Noting Your Components" on page 3 and note which jacks you used to connect your laser disc player. In addition, note the brand name and model number of the laser disc player.

Connecting Your Turntable/Record Player

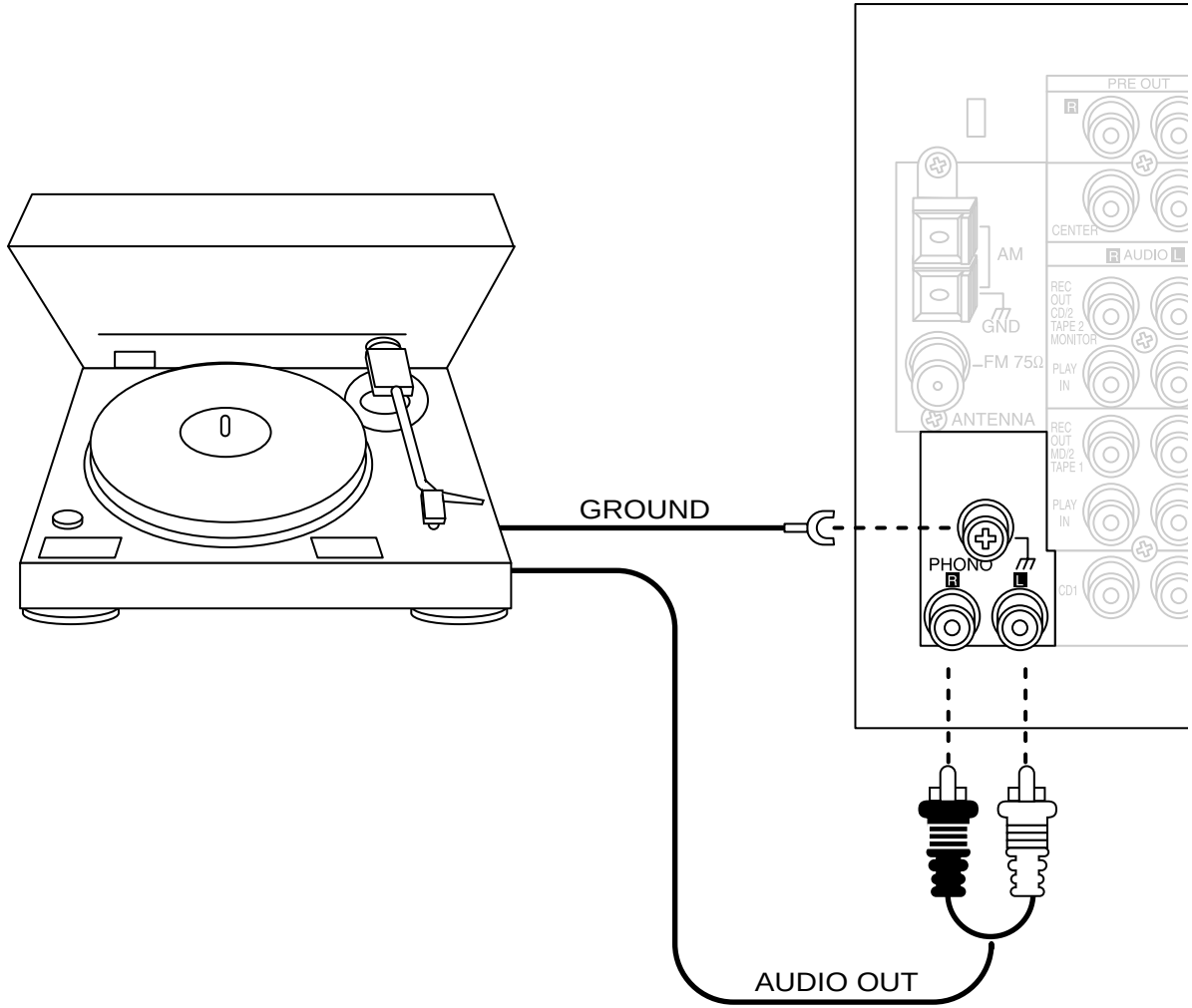

Do not plug in the receiver to AC power until you have connected all your components.

This section focuses on the connections from your turntable/record player to the VR-2090/VR-2080. Please refer to your turntable/record player's instructions for more detail about its connection jacks and capabilities.

To Connect a Turntable/Record Player:

1. Connect the audio cables from the turntable audio output jacks to the receiver's PHONO R and L jacks.
2. If your turntable includes a ground cable, connect the ground cable to the receiver's PHONO ground jack.
3. Go to "Noting Your Components" on page 3 and note which jacks you used to connect your turntable. In addition, note the brand name and model number of the turntable.

Connecting a Camcorder or Additional VCR

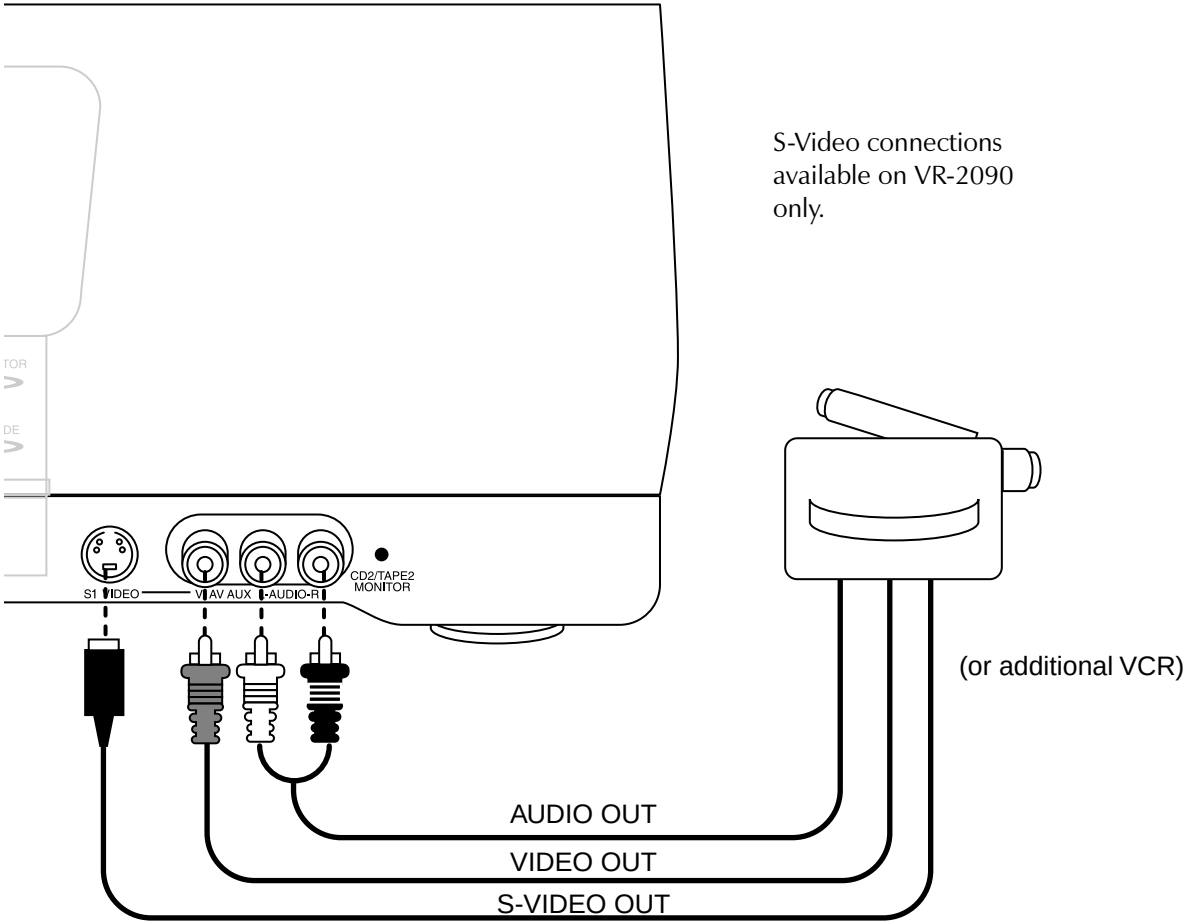

This section focuses on the connections from your camcorder or VCR to the front of the VR-2090/ VR-2080. Please refer to your camcorder or VCR's instructions for more detail about its connection jacks and capabilities.

These instructions describe how to connect a camcorder or VCR quickly and probably temporarily to the front of the receiver. If you want a less cluttered and more permanent connection, see "Can I Connect a Second VCR Permanently?", to the right.

To Connect a Camcorder or Additional VCR:

Connect the audio and video cables from the camcorder or VCR's Audio and Video jacks to the receiver's front panel jacks as shown above.

Can I Connect an Additional VCR Permanently?

Yes. To do so, follow the instructions under "To Connect a Second VCR:" on page 13.

What if I Have Several Kenwood Components (System Control Chaining)?

Kenwood provides convenient control of the entire system via two control modes:

- SL16, which allows you to connect SL16 components only
- XS8, which allows you to connect XS, XS8, and XR components

You cannot mix SL16 and XS8 settings. All components connected via system control cables must use the same setting.

An Example of SL16 Chained Connections:

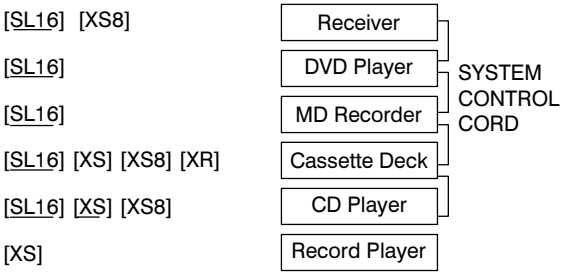

An Example of XS8 Chained Connections:

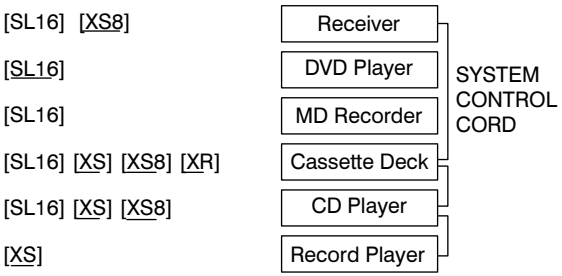

To switch between the two modes, simply slide the selector switch (shown below) from SL16 (the factory-set default) to XS8. Then turn the receiver's power switch off, and on again:

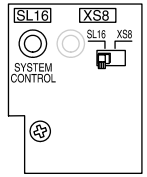

System control allows you to:

- control connected components via the PowerPad
- switch the receiver's input automatically to a connected component when you start playback from that component
- synchronize recording a CD, MD, or analog disc automatically when you start playback from those connected components

Make sure the units are connected to the correct jacks on the receiver—for example, no component connected to the CD2/Tape2 Monitor jacks can use a system control cable.

Some CD players and cassette decks do not support the SL16 system control mode. Do not include these components in a set of SL16 chained connections; where appropriate, use the XS8 mode instead.

Do not mix connections of the two modes: if a component does not support the mode you are using for chaining, do not connect that component.

Do not connect system control cables to any component not specified by Kenwood. Using system control functions with a component that does not support them can damage the component.

Make sure system control plugs are firmly seated in the appropriate jacks.

Connecting the Antennas

AM Loop Antenna

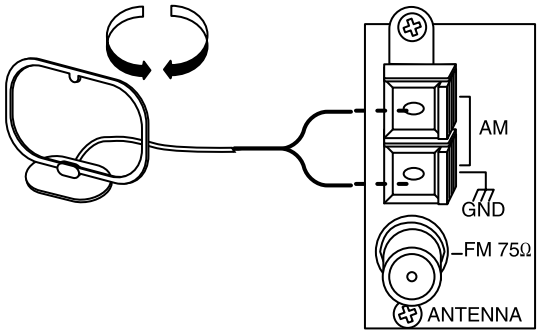

Your new receiver comes with an AM loop antenna for AM radio reception. To connect the AM antenna:

1. Insert the antenna loop into the base and position the loop.
2. Open the receiver's antenna terminal levers.
3. Insert the antenna's wires into the terminal as shown above.
4. Close the antenna terminal levers to lock the wires in place.
5. Adjust the antenna loop as necessary to improve reception.

To prevent hum interference, keep the AM antenna wires away from speaker wires, AC power cords, and the TV chassis.

FM Indoor Antenna

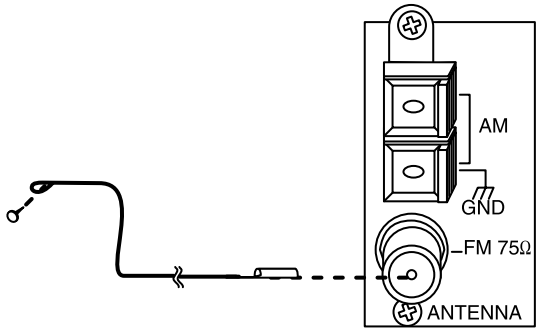

Your new receiver also comes with an FM indoor antenna for FM radio reception. To connect the FM antenna:

1. Attach the antenna sheath to the pole in the center of the receiver's FM antenna jack, as shown above. When you attach the sheath for the first time, you may need to exert quite a bit of pressure.
2. Adjust the antenna as necessary to improve reception.
3. Tack the looped end of the antenna in the location that provides the best reception.

FM Outdoor Antenna

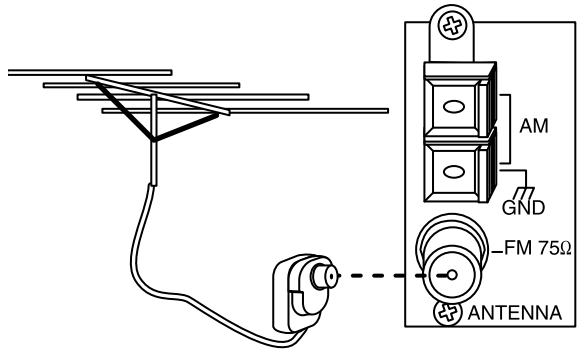

Kenwood recommends a permanently installed outdoor FM antenna for best FM reception. To connect an outdoor FM antenna:

1. Connect the antenna wire to a standard, commercially available antenna adapter as shown above.
2. Connect the adapter to the receiver's FM antenna jack.

What if I Have Cable Radio?

If you have cable radio, contact your cable provider for assistance with connecting to the VR-2080/ VR-2090.

Chapter Two: Setting Up PowerPad

Your new PowerPad controls your new receiver and can be set up to control most components attached to it. PowerPad appears and functions a little differently from traditional remotes. Because it can control so many different components, it presents a separate set of controls for each component on an LCD screen. You use the Enter/joystick button to move from control button to control button and to press the selected button.

Only components previously identified and connected to the receiver will appear as icons on the display screen. If you are "missing" an icon on your display screen, make sure you have identified the component to PowerPad. This chapter describes identifying components to PowerPad.

Your new PowerPad operates in the following range:

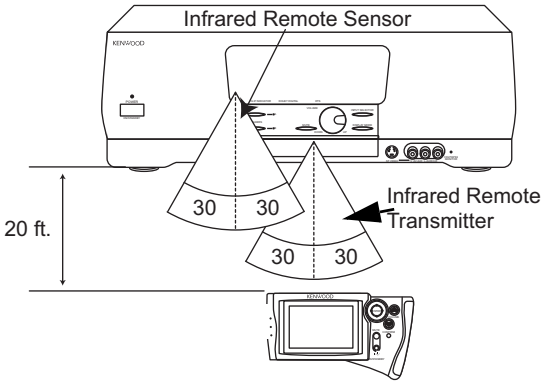

If you use PowerPad outside of this range, PowerPad's display may show incorrect information. As you use PowerPad, be aware of the following:

- When PowerPad's operating range gets shorter or PowerPad displays a low battery alarm, replace all four batteries.
- Do not install the receiver where direct sunlight or high-frequency fluorescent lighting can shine directly into the remote sensor. This can damage your new receiver.

PowerPad is always on. It never turns off unless you remove its batteries; however, the display screen on PowerPad goes dark when PowerPad is not in use, much like a screen-saver on a computer.

This chapter contains the following sections:

Installing the Batteries	page 30
Selecting the Model Type	page 31
Navigating PowerPad Interface	page 31
Understanding the Menu Structure	page 32
Setting Up Speakers	page 33
Identifying Components to PowerPad	page 35
Storing Radio Stations In Memory	page 37

Installing the Batteries

Before you can set up any PowerPad item, you need to install batteries.

- The batteries that came with your new PowerPad are intended for you to use for an operation check—they may not last as long as ordinary batteries. We recommend replacing them with alkaline batteries for normal use.
- PowerPad can retain memory settings for 30 seconds without batteries. When you change the batteries, try to complete the battery installation (step 2) within this time frame, or you will need to set PowerPad up again.

To install the batteries:

1. Use a pen or your fingernail to move the latch in the direction of the arrow and remove the cover.

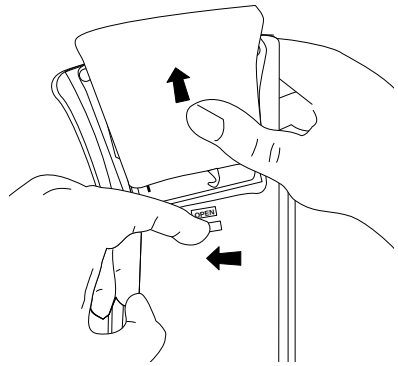

2. Insert four AA batteries as shown below:

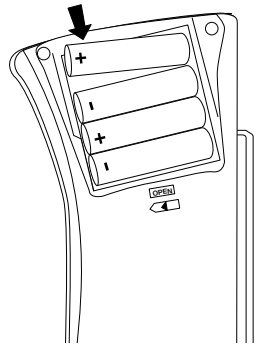

3. Close the cover.

Selecting the Model Type

After you install the batteries or reset PowerPad, you need to identify the model type.

If you are replacing batteries and complete the battery replacement within 30 seconds, you do not need to select the model type; it is stored in memory.

To select the model type:

1. Use the following table to identify the correct model type:

If you have this receiver…	Use this model type…
VR-2090	MODEL 1
VR-2080, KRF-V7771D (U.S. Military)	MODEL 2
(not used for these models)	MODEL 3

2. Press the Enter/joystick button to turn the remote on.
3. Use the Enter/joystick button to move the flashing highlight bar to the correct model.
4. Press down on the Enter/joystick button to select the highlighted model.

For more information on using the Enter/joystick button, see “Navigating PowerPad Interface” on this page.

You are now ready to begin setting up your new PowerPad.

Resetting PowerPad

If you want to reconfigure PowerPad, you can reset it. You do not need to do this unless you experience a problem.

1. Open the cover and remove the batteries, as described under “Installing the Batteries” on page 30.
2. Use a pen or other thin-tipped object to press the blue button in the center of the battery case:

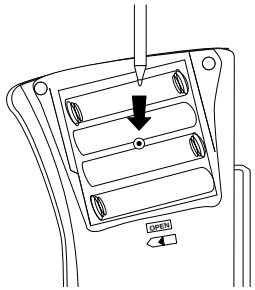

3. Reinstall the batteries and follow the instructions in this chapter to set up PowerPad again.

Navigating PowerPad Interface

1. Press the joystick or any button to turn on Power-Pad’s display.
2. Look for a blinking square—this is the “highlight” box. Whatever icon it surrounds is currently selected and ready to be activated.
3. Push the top, bottom, left, or right side of the Enter/joystick button as many times as necessary to move to the icon you want to select:

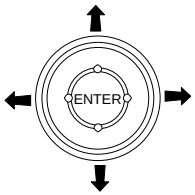

When you get all the way to the edge of the display, push the joystick once more in the same direction and the highlight box will “wrap around” to the icon or button on the other side of the display.

4. Press down on the Enter/joystick button to select the desired icon and its available settings. Remember that only the icons corresponding to components previously identified and connected to the receiver will appear on PowerPad’s display.

Understanding the Menu Structure

For the rest of this chapter, you will be using the various settings on the Setup tab of the main menu. This section describes how to navigate the menu and presents an outline of the structure you will find under the options on this tab.

Selecting the Main Menu

To select the main menu:

1. Move the highlight box to the Main Menu icon:

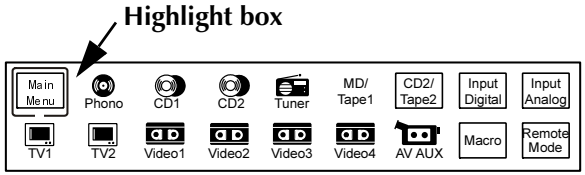

2. Press Enter. PowerPad's display shows the main menu Setup tab (since that's what you'll need to use first):

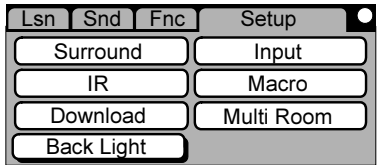

Selecting and Using Main Menu Tabs

Once you have accessed the main menu, you can select a tab to work with and choose settings on the tab.

To select a tab, use the joystick to move the highlight box to a menu tab name. The box becomes a dark bar over the tab name, and the selected tab displays its full name (the names are abbreviated until you select them).

To select a setting on a tab:

1. Use the joystick to move the highlight bar from the tab name to a tab setting.
2. Press Enter to select the setting. The menu changes to show the choices available.

EXAMPLE You want to set up your speakers. You select the main menu and the Setup tab. On the setup tab, you use the joystick to move the highlight bar down one, to Surround. You press Enter (you'll hear a slight click) to select Surround and see its options.

3. Some of the settings will have additional settings below them. To access these settings, press Enter on a setting name. The menu changes to show you the additional settings.

EXAMPLE You want to perform Quick Setup on your speakers. On the Setup Surround settings, you press Enter on SP Selection (which is already highlighted because it is the first choice). You can now view and use the Speaker Selection settings.

Here are some additional tips for navigating the settings:

- When you get all the way to the edge of the display, push the joystick once more in the same direction and the highlight box will "wrap around" to the icon or button on the other side of the display.
- If the settings have several screens' worth of choices, PowerPad includes a Next button. Press that to move to the next screen. Be sure to press the screen's Enter button to save your changes before moving to the next screen.
- Each setting screen includes a check-mark button that sends you back to the previous menu:

- The display will still go dark when it has been idle, but the idle time is longer in the setup screens.

The Setup menu includes the following settings and their subsettings:

- Surround ("Setting Up Speakers" on page 33)

  These menu settings allow you to set up speakers and subwoofer, set the distance from your speakers to the listening area, determine speaker levels, and set the surround speaker type. The Next button on each screen takes you to the next group of settings (i.e., pressing Next at SP Selection takes you to SP Distance without having to go back to the menu).
- IR ("Identifying Components For PowerPad Control" on page 35)

  This menu setting allows you to identify your connected components to PowerPad.
- Download ("Identifying Components For PowerPad Control" on page 35)

  This menu setting allows you to retrieve codes for any components you have that are not listed in the codes chart.
- Back Light (*VR-2090/VR-2080 Users' Guide*). This menu setting allows you to turn PowerPad's backlight on and off.
- Input (*VR-2090/VR-2080 Users' Guide*)
- Macro (*VR-2090/VR-2080 Users' Guide)*. This menu setting allows you to create custom macros that perform several operations (such as turning a component on, changing the receiver's input, and changing a TV station) with a single press on the joystick.
- Multi Room ("Chapter Three: Setting Up Multiple Zones (VR-2090 Only)" on page 39) VR-2090 only. This menu setting allows you to activate dual-zone control, and to select which zone you want to control with PowerPad.

Setting Up Speakers

Before you can begin using the receiver to control your home entertainment system, you must set up PowerPad to operate your speakers effectively. There are four areas of speaker setup:

- SP Selection
- SP Distance
- SP Level
- Surr. SP Type

You can set up your speakers in the order presented here (via the Next button) or individually, selecting each option from the Surround menu.

The receiver must be on and speakers must be connected before you can set up speakers.

To begin setting up speakers:

1. Select the Main Menu icon and access the Setup tab.

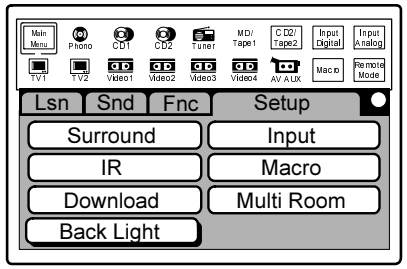

2. Select Surround from the Setup settings.

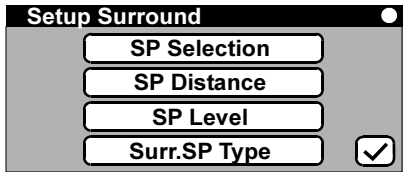

SP Selection

1. Select SP Selection from the Setup Surround menu.
2. Kenwood provides two ways to set up your speakers:

Quick Setup: Use this method for a simplified setup where you identify whether a speaker is present and let the receiver automatically determine the appropriate speaker settings. Quick setup configures three speakers: SW=subwoofer, C=center, and S=left and right surround.

a. Select a speaker.

b. Aim the remote at the receiver. If the speaker is present, press Enter on the joystick until "Yes" appears under the speaker name:

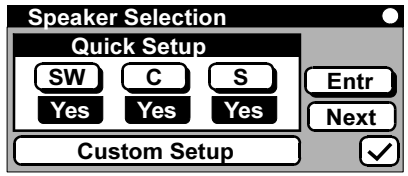

c. Repeat steps a and b for each speaker.

d. Select Enter on PowerPad display to save the settings.

e. If you selected Yes for the subwoofer, all of the bass below 80Hz is removed from all other speakers in your system and is sent to the subwoofer in all listening modes. This improves your speakers' power handling and reduces overall distortion.

f. Press Next and go to Step 3 under "SP Level" on page 34.

Custom Setup: Use this method for a more customized setup where you determine more of the speaker settings, such as the bandwidth of the sound sent to each speaker. Custom setup configures the following: SW=subwoofer, F=left and right front, C=Center, and S=left and right surround.

a. Select Custom Setup on the Speaker Selection dialog:

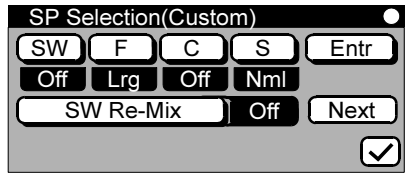

b. Select a speaker.

c. Press Enter on the joystick button until the correct setting appears:

- **Off** means you are not using the speaker. (Not available for front speakers).
- **On** means that you are using the speaker. (Only available for subwoofer).
- Select **Nml** if the speaker is not capable of producing clean, deep bass energy at output levels that match those produced by a typical powered subwoofer. All bass below 80Hz in that channel is removed from that speaker and is sent to the subwoofer in all listening modes. Most speakers should be considered **Nml.**
- Select **Lrg** if the speaker is capable of producing clean, deep bass energy at output levels that match those produced by a typical powered subwoofer. All bass below 80Hz in that channel is left in that speaker in all listening modes. Full-range speakers capable of this level of bass performance are very uncommon, and are

almost always too large to be used as center or surround speakers.

d. Select **SW Re-Mix**. Press Enter on the joystick until the desired setting appears:

- **On** is designed to maximize the bass coming from your left and right front speakers and subwoofer in all listening modes. In Dolby Digital and DTS listening modes, **SW Re-Mix** mixes some of the bass from the subwoofer (mostly the LFE track) back into your left and right front speakers if they are set to Lrg. In Dolby Pro Logic, DSP and Stereo listening modes **SW Re-Mix** mixes some of the bass from your left and right front speakers (if they are set to Lrg) back into the subwoofer.
- **Off** does not re-mix the bass to or from the subwoofer and your left and right front speakers.

  If your left and right front speakers are set to **Nml**, **SW Re-Mix** does not function.

e. Select Enter on PowerPad to save the settings.

3. Select Next to move to the next speaker setting or press the check icon to return to the Surround menu.

If your front speakers are set to **Nml**, you can only set your center and surround speakers to **Nml** (or **OFF**).

SP Distance

1. Measure the distance from each speaker to the seat you most often use. Note the distance in the table below:

Speaker	Distance (ft or m)
left front	
center	
subwoofer	
right front	
left surround	
right surround	

2. Select the left (◁) or right arrow (▷) next to SP to select a speaker:

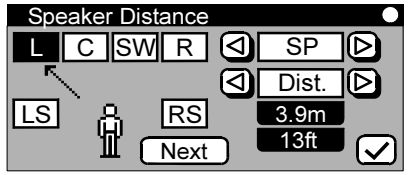

3. Select the left (◁) or right arrow (▷) next to Dist. to set the distance for the selected speaker.
4. Repeat steps 2 and 3 for each speaker.
5. Select Next to move to the next speaker setting or press the check icon to return to the Surround menu.

SP Level

In this step you will use your ears to balance the volume level of all the system's speakers *except the subwoofer* for your room and listening position. (To set the subwoofer level, see below.) When all of the speakers are set at the same volume level, your system will create a more realistic, spacious surround sound environment.

1. Eliminate as many external noise sources as possible.
2. Sit in the place where you and your guests are most likely to sit while watching movies or listening to music.
3. Turn the receiver's master volume up to -15dB. If this level is uncomfortably loud, lower the volume to -20dB. (For greatest accuracy, the level-setting procedure should be performed at a moderately loud listening level.)
4. Select the Test Tone button until the Test Tone display reads "Manual."

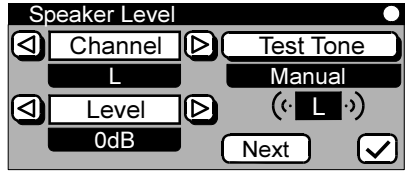

5. Test noise will play from the left front speaker. Carefully listen to the volume level of the noise.
6. Select the left (◁) or right (▷) Channel arrows to select the next speaker.
7. Carefully listen to the volume level of the test noise. If the noise is a different volume than the noise from the left front speaker, use the left (◁) or right (▷) Level arrows to adjust the volume so that the volume matches the volume from the left front speaker. (Do not be concerned with the volume number readout on the Level display—this is for reference purposes only. Use your ears to determine if the two speakers are playing at the same volume).
8. Repeat steps 6 and 7 until all of the system's speakers (except the subwoofer) play at the same volume.
9. To confirm the volume levels, select the Test Tone button until the Test Tone display reads “Auto.” The test noise will automatically cycle between all of the speakers. Fine-tune the channel levels as necessary.

10. When all the channels sound like they're the same volume, you've balanced your system.
11. To turn off the test noise, select the Test Tone button until the Test Tone display reads “Off.”

Setting the subwoofer level: Because of the way humans hear, the test noise through the subwoofer will not sound as loud as it really is. (The subwoofer test noise is designed to be used with a sound pressure level meter for balancing.) Because of this, you cannot use the test noise to properly calibrate the level of your subwoofer by ear.

To set the subwoofer level, listen to familiar music or films that have strong bass content and adjust the subwoofer level until it sounds balanced with the rest of the speakers.

Surr. SP Type

1. Select Surround SP until the type of connection you used appears:

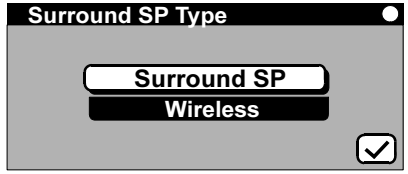

- **Wireless** means that you are using wireless speakers and the receiver will apply equivalent signal delay compensation automatically.
- **Wired** means that you connected the speakers to the receiver via speaker wire as described in Chapter One.

2. Press the check-mark icon to return to the Surround menu.

You are now finished setting up the speakers.

Identifying Components For PowerPad Control

How Do I Identify Components?

1. Make sure you have installed batteries and chosen a model type.
2. Select the Main Menu icon and access the Setup tab.

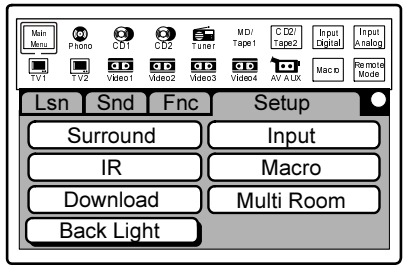

3. Select IR from the Setup settings and press Enter on the joystick.

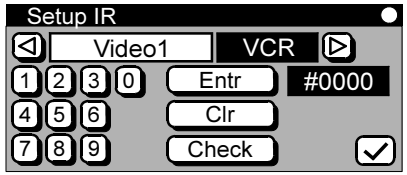

4. Refer to “Noting Your Components” on page 3 where you noted which component was connected to which jack set.
5. Using the Setup Codes chart included with your receiver, note the appropriate PowerPad Setup Code under “Noting Your Components” on page 3.

   For Kenwood components connected via system control cables, use the following codes:

If you connected this Kenwood component…	Use this code…
Cassette Deck	7990
Single CD Player	8990
Rotary CD Player	8991
200-Disc Changer (CD1 and CD2)	8992
MD Recorder	9990

6. Press the left (◁) or right arrow (▷) until the name shows the jack set for the component you want to identify. You can identify components connected to the following jack sets:
   - TV1 and TV2 (these allow PowerPad to control your TV or cable tuner, even if it isn’t connected to one of the receiver’s input jack sets).
   - Video1 through Video4
   - CD1
   - MD/Tape1
   - Tape2 (which corresponds to the CD2/Tape2 jack set on the receiver)

   Note that Phono and AV AUX (the additional camcorder/VCR jack set on the front of the receiver) do not need to be configured here.
7. Enter the first code on the list. If you make a mistake, you can press Clr and try again.
8. Press Check (not the check mark). This instructs PowerPad to send a test signal to the receiver. If your component turns on, the code you entered was correct. If it does not turn on, try the next code in the list. Continue until one of the codes works.

9. When you have a code that works, press Enter on PowerPad's display. Notice that the input jack name appears on the icon rows. Check off that component on your list.

Repeat steps 5 through 8 until you are finished identifying components to PowerPad. When you are done, turn to "How Do I Operate Components?" on page 24 in the *Users' Guide* and note which icon corresponds to which connected component.

If PowerPad goes into sleep mode while you are looking up a Setup Code, you may need to select the jack set again.

The code area will always read #0000 unless you have just set up a code.

Codes for controlling Makita and Lutron home automation systems are pre-programmed into PowerPad.

What if I Have a Kenwood 200-Disc CD Changer?

If you have a Kenwood Dual-Play 200-Disc CD Changer, you will need to set both CD1 ***and*** TAPE2 to the correct code for this component (8992).

What if I Connected a CD to the Jack Set PowerPad Calls Tape2?

To set the CD2/Tape2 input for CD:

1. Return to the Main Menu and access the Setup tab.
2. Select Input from the Setup settings.
3. Select CD2/Tape2 from the Input settings.
4. Press Enter on the joystick until CD2 appears in the display.

What if My Component is not on the Codes List? What if None of the Codes from the List Work?

If the component you want to identify is not on the code list or if none of the listed codes work for a component, you can download new codes over the telephone using PowerPad's FutureSet upgrade feature.

When you download a new code, you overwrite the last one for that component. Be sure to tell the customer service representative if you have downloaded codes via FutureSet before.

To download new codes:

1. Select the Main Menu icon and access the Setup tab.
2. Select Download from the Setup settings.

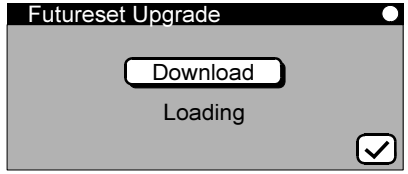

   - Back lighting is automatically turned off during downloading.
   - To stop the download, press and hold the CONFIRM key on PowerPad. When PowerPad displays the message "Canceled", press the check icon to exit this feature.
3. Refer to "Noting Your Components" on page 3 where you noted which component was connected to which jack set and the brand names/model numbers. If the customer service representative asks, your PowerPad control is model number RC-R0907.
4. Call 1-800-753-9860 (USA) or 1-800-644-0073 (Canada). The service center is open the following hours:

Monday - Thursday	9:00 AM - 7:00 PM (EST)
Friday	9:00 AM - 5:30 PM (EST)
Saturday	12:00 PM - 4:00 PM (EST)
Sunday	Closed

5. When the customer service representative instructs you, hold PowerPad to the ear piece on your phone's handset as shown below:

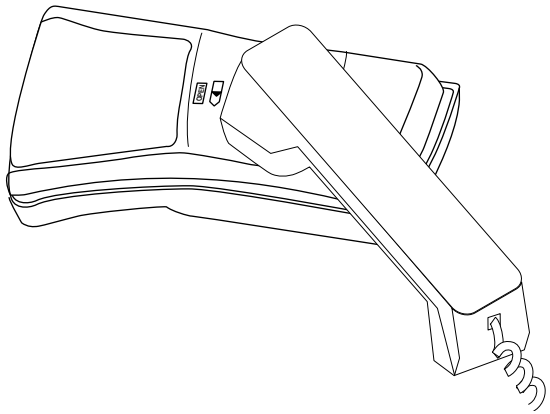

Before you begin downloading, the representative will give you a code number for each code you requested. Note the number in your jack/brand/model list, as you will need it in the next steps.

Once the download is finished (PowerPad's display will read "Done") you may hang up. PowerPad will automatically access the next screen:

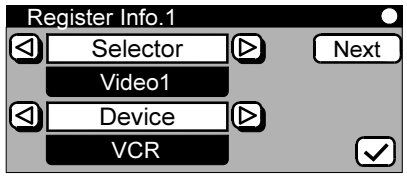

6. Press the left (◁) or right Selector arrow (▷) until the display shows the jack set for the component you want to identify.
7. Press the left (◁) or right Device arrow (▷) until the display shows the correct type for the component you want to identify to PowerPad.
8. Press Next to access the second registration screen:

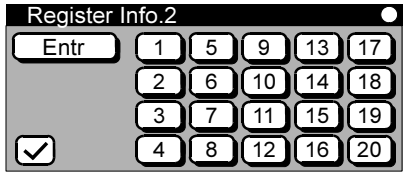

9. Select the number "1" icon and press Enter on the joystick.

   The component should turn on. If it does not, continue selecting number icons in numeric order (2-20) until the component does turn on.
10. Once you have selected the correct number (and the component's power turns on), press Enter on PowerPad's display and check off the component on your list. PowerPad returns to the first registration screen.
11. If you downloaded codes for more than one component, repeat steps 6 through 10 until all the components are identified to PowerPad. Press the check icon to close this feature.

What if I Need More Codes than the Screen Displays? If you needed to download more than 20 codes, the customer service representative can give you the four-digit number(s) associated with the component(s) you downloaded. Use the procedure under "How Do I Identify Components?" on page 35 to use these four-digit codes.

How Do I Replace a Setup Code with a New One?

If you purchase a new component to replace an existing component, you will need to identify the new component to PowerPad. To do so:

1. Connect the component as described in the appropriate section of Chapter One in this guide.
2. Follow the steps under "How Do I Identify Components?" on page 35. Select the jack set to which your new component is attached and enter the new code. When you press Enter on PowerPad's display to save it, it will replace the other code.

How Do I Delete Setup Codes?

If you disconnect a component and do not plan to replace it, you may want to delete the setup code from PowerPad. To do so:

1. Select the Main Menu icon and access the Setup tab.
2. Select IR from the Setup settings.
3. Press the left (◁) or right arrow (▷) until the name shows the jack set for the component you want to delete.
4. Enter 9999 for the component code and press Enter on PowerPad's display. This clears the component from PowerPad. You'll notice that the component icon disappears from the icon rows.

If you delete a component with a FutureSet code, you must re-download the FutureSet code and re-identify it to PowerPad if you want to use that component again. For more information, see "What if My Component is not on the Codes List? What if None of the Codes from the List Work?" on page 36.

Storing Radio Stations in Memory (optional)

Your new PowerPad provides two ways to store radio stations:

- Manual Memory, which allows you to enter and store specific stations.
- RDS Automatic Memory (VR-2090 only), which searches for stations broadcasting an RDS signal and automatically stores them in the first available storage button.

There are 40 storage buttons available.

If you have a VR-2090, search for and store RDS stations first, then set stations manually. The search function automatically assigns RDS stations to the first storage button, overwriting any stations already stored there.

You can overwrite RDS stations with manually stored stations.

Storing Stations Manually

1. Select the tuner icon.

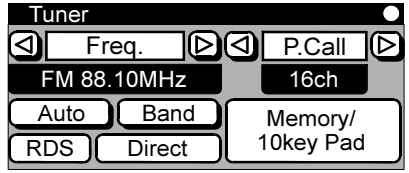

2. Select Band to choose the receiving band (AM or FM).

3. Choose the station you want to store using one of the following methods:
   - Press the left (◁) or right arrow (▷) next to Freq. until the station's broadcast frequency appears.
   - Press Direct and enter the broadcast frequency using the 10key pad.
4. Press Memory/10key Pad:

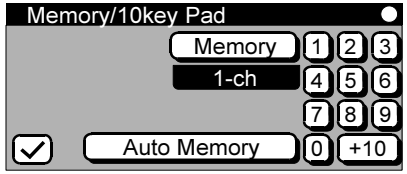

5. Press Memory.
6. Press a storage button. Press +10 as many times as necessary to store the station at a higher number than 9. For example, to store a station at 20, press +10 +10 0.

   If you choose a storage button that already has a station assigned, the new station will replace the previously-stored station.
7. Repeat steps 3 through 6 for each station you want to store.

Storing RDS Stations Automatically (VR-2090 Only)

1. Select the tuner icon.

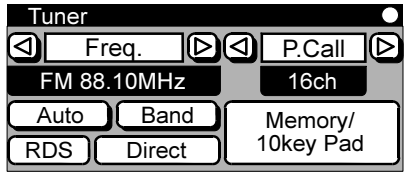

2. Select Band to set the receiving band to FM.
3. Press Memory/10key Pad:

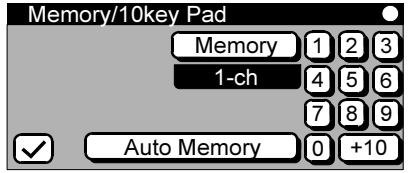

4. Press Auto Memory. The receiver locates and stores any FM stations broadcasting an RDS signal. This process can take a few minutes to complete; please be patient. While the receiver is searching, the tuner indicator on the receiver's front panel blinks.

RDS stations are stored in the order they are found, up to 40 stations. If the search finds fewer than 40 stations, the receiver may automatically store other FM stations in the open storage buttons.

If you are repeating the RDS search, any existing preset stations (whether automatically or manually stored) will be replaced by the results of the new search.

Chapter Three: Setting Up Multiple Zones (VR-2090 Only)

The VR-2090 offers dual-zone output and control, which enables you to use a single receiver to control components and speakers for two rooms (or zones). Due to its advanced features and controls, you can play music in one room while watching a movie in the other!

Depending on your tastes and budget, you can set up one of the following “sound scenarios” to make full use of the VR-2090’s capabilities:

No additional amplifier for Zone B: You can use the VR-2090's Speaker B output for Zone B. This allows you to listen to full surround sound in Zone A only, or in stereo or Dolby 3 Stereo in Zone A when Zone B is active. The sound in Zone B will always be in stereo.

Stereo amplifier for Zone B: You can use an additional stereo amplifier for Zone B (connected to the VR-2090's Second Room Preouts). This allows you to listen to full surround sound in Zone A even if you are also listening in Zone B. The sound in Zone B will always be in stereo.

Dolby Pro Logic Receiver for Zone B: You can use an additional Dolby Pro Logic receiver for Zone B (connected to the VR-2090's Second Room Preouts). This allows you to listen to full surround sound in Zone A and Zone B, even if you are using different sources in the two rooms at the same time.

Multiple zones require you to run wires and cabling from the primary zone (Zone A) where your VR-2090 receiver is installed to another zone (Zone B) where an IR Repeater (so you can use your PowerPad to control components), a second set of speakers, and possibly a second TV/Monitor is installed:

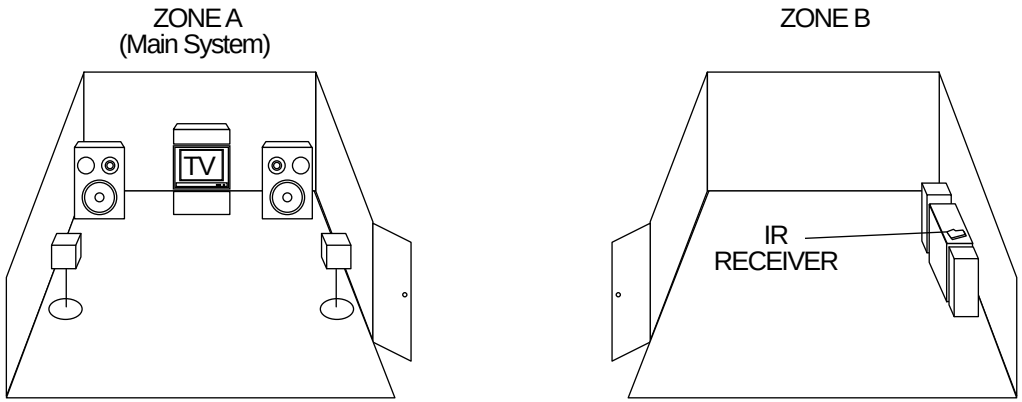

This chapter discusses some of the connection configurations and additional PowerPad setup necessary if you want to take full advantage of the VR-2090’s multi-room capabilities. It contains the following sections:

Making Connections page 40

Setting Up PowerPad page 45

NOTES

Kenwood recommends hiring an installer to make multiple-room connections and setup.

Making Connections

This section describes how to connect speakers in the two zones to support the different scenarios. Before you read this section, Kenwood recommends reading "Connecting Your Speakers" on page 4 of this guide. In addition, this section discusses how to connect a second TV/Monitor and how to connect an IR Receiver, IR Repeaters, Relays, and a TV On/Off Sensor (for use with Perfect Macro).

Understanding how the VR-2090 Powers Speakers

The VR-2090 has five internal amplifiers for powering speakers. When you connect the left and right front, left and right surround, and a center speaker, these amplifiers are sufficient to provide surround sound in Zone A whenever you require it. When you also connect left and right front Zone B speakers and use them while you're listening in Zone A, the VR-2090 reroutes the Zone A surround amplifiers from powering the surround speakers to powering the Zone B speakers, resulting in Dolby 3 in Zone A:

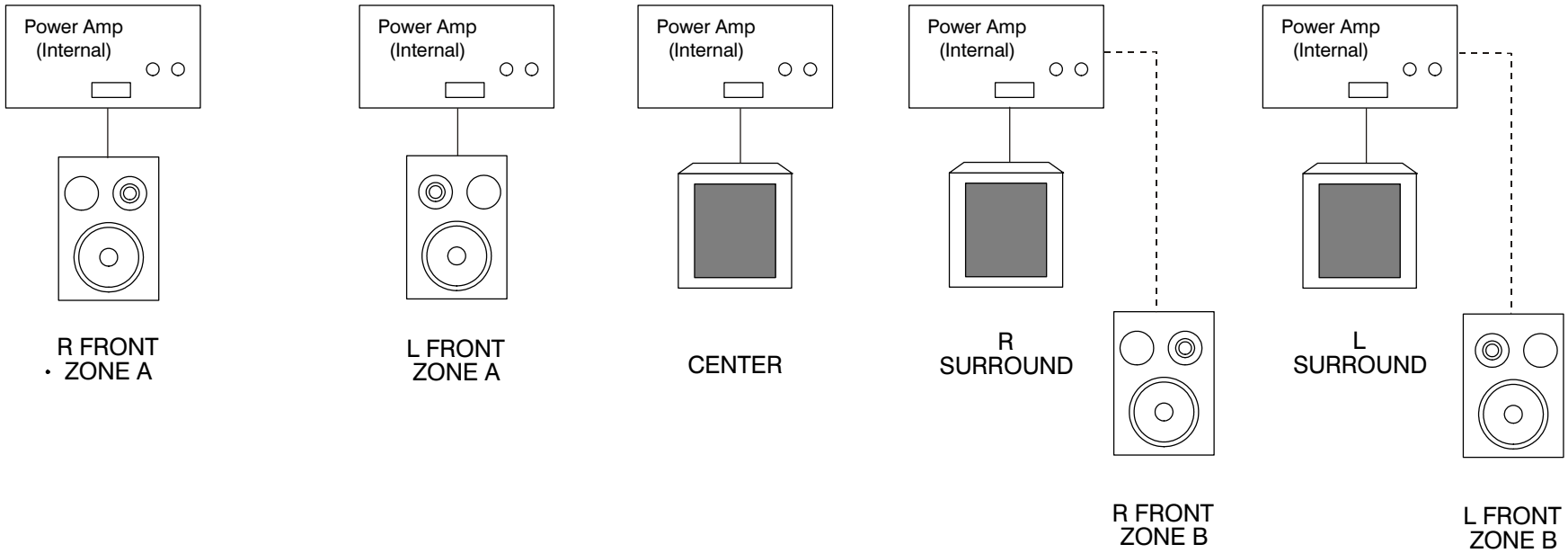

If you want surround sound in Zone A regardless of whether sound is playing in Zone B, you must purchase additional amplifiers for the speakers in Zone B. If you want surround sound in Zone B as well, you must purchase a Dolby Pro Logic receiver for Zone B.

Scenario One: Surround Sound/Stereo in Zone A and Stereo in Zone B (Using the VR-2090's Speaker B Outputs)

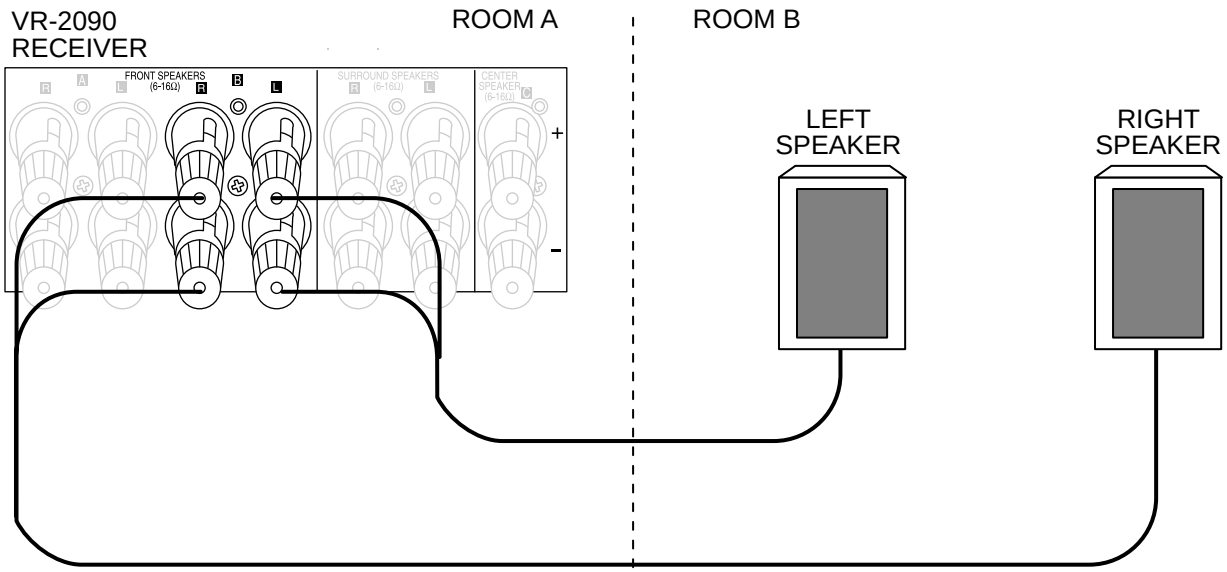

The five amplifiers built into the receiver meet your sound needs for both zones. The built-in amplifiers allow you to listen to full surround sound if you are listening in Zone A only, or stereo or Dolby 3 stereo in Zone A if both zones are active. You will always hear stereo in Zone B. Make the speaker connections as shown in the illustration under "To Connect Front and Surround Sound Speakers:" on page 5, being sure to also connect the Zone B speakers to the SPEAKER B pin jack set.

Scenario Two: Surround Sound in Zone A and Stereo in Zone B (Using a Stereo Amplifier in Zone B)

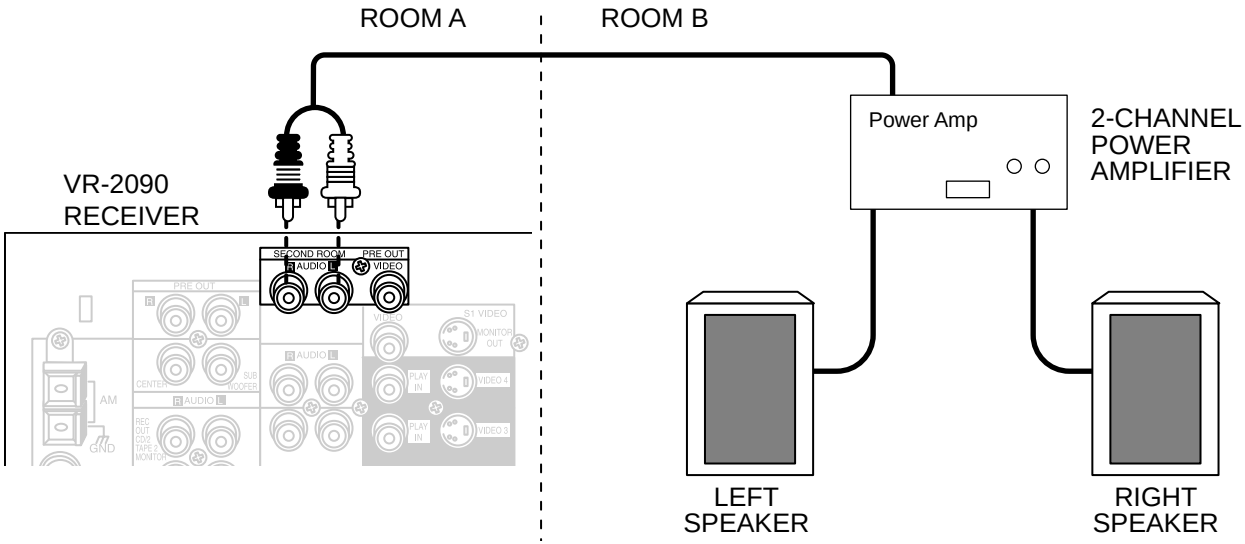

You use an additional stereo amplifier for Zone B. This allows you to listen to full surround sound in Zone A even if both zones are active. You will always hear stereo in Zone B. Make the speaker and amplifier connections as shown in the illustration.

Scenario Three: Surround Sound in Both Zones (Using an Additional Amplifier or a Second Receiver)

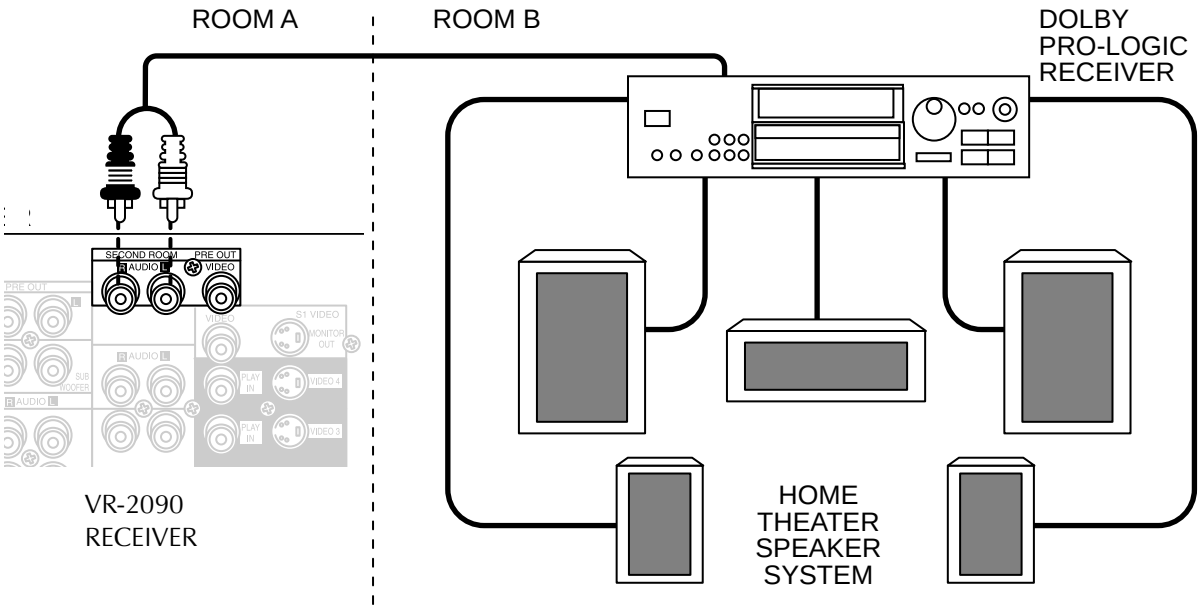

You can use a Dolby Pro Logic receiver for Zone B. The receiver allows you to listen to full surround sound in Zone A and full surround sound in Zone B. Make the speaker and receiver connections as shown in the illustration.

Connecting a Second TV/Monitor

If you plan to watch movies, play video games, or any other visual entertainment activity in Zone B, you must connect an additional TV/Monitor. To do so, connect a standard composite video cable from the Zone B TV to the SECOND ROOM PRE OUT VIDEO jack.

Connecting an External Infrared Receiver (VR-2080 and VR-2090)

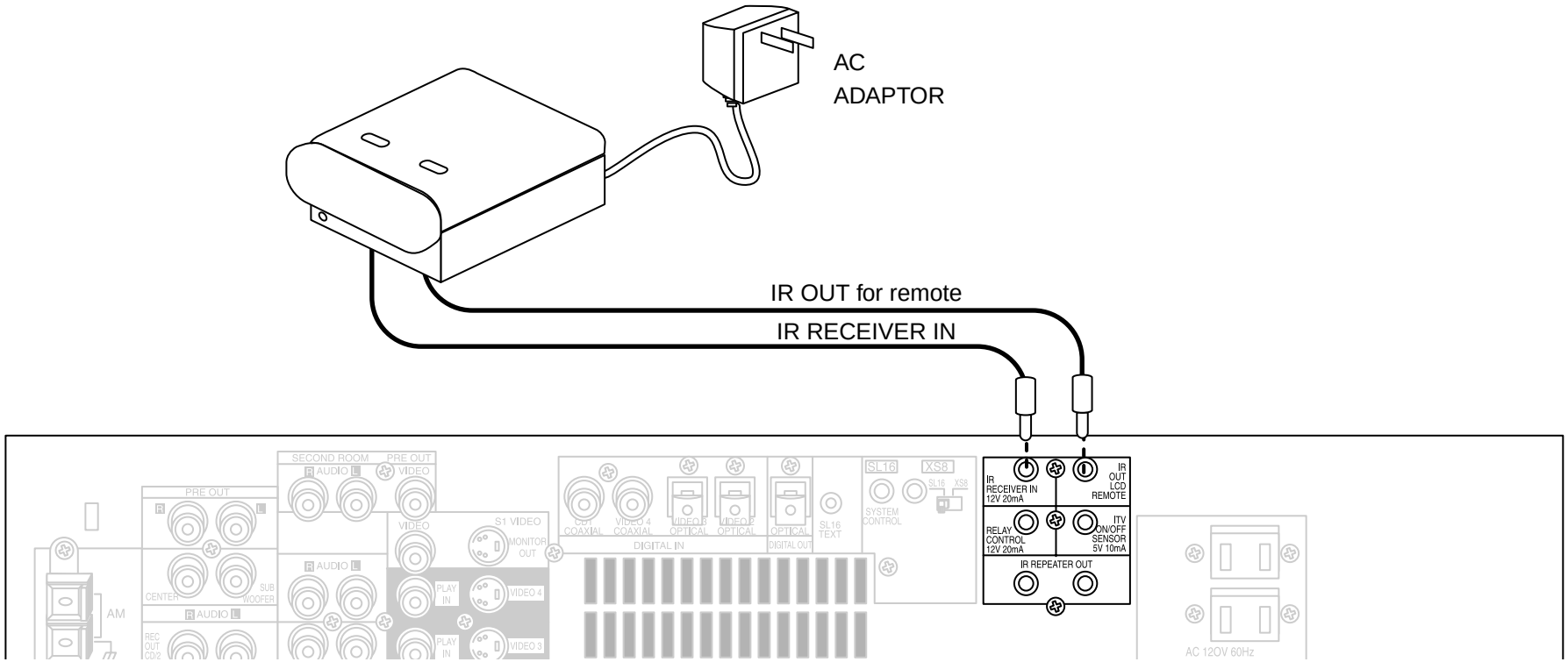

Your new audio-video receiver supports the IR-9991 two-way external infrared (IR) remote transceiver control. The IR-9991 enables you to use the VR-2080/VR-2090's PowerPad to operate the receiver if it is:

- in a stereo closet/cabinet
- behind glass doors
- in another room
- in any situation where the device to be controlled is not visible

You can substitute Xantech (291-80, 480-30, or 490-30 series) or Niles (model MS-2) IR receivers for the IR-9991. However, these devices are one-way only, and will not supply system status feedback to PowerPad.

For more information about using external IR receivers in another room, see "Chapter Three: Setting Up Multiple Zones (VR-2090 Only)" on page 39.

To Connect an External Infrared Receiver:

1. Connect the IR cable from the IR receiver's IR RECEIVER IN jacks to the VR-2090/VR-2080's IR RECEIVER IN jack. This jack supports a 12V 20mA signal.
2. Connect the IR cable from the IR-9991 transceiver's IR OUT FOR REMOTE jack to the VR-2080/VR-2090's IR OUT LCD REMOTE jack.
3. Connect an AC adapter to the IR receiver. **Do not** plug the adapter into the wall until all connections are made.

Connecting and Setting Up IR Repeaters, On/Off Sensors, or Relay Controls

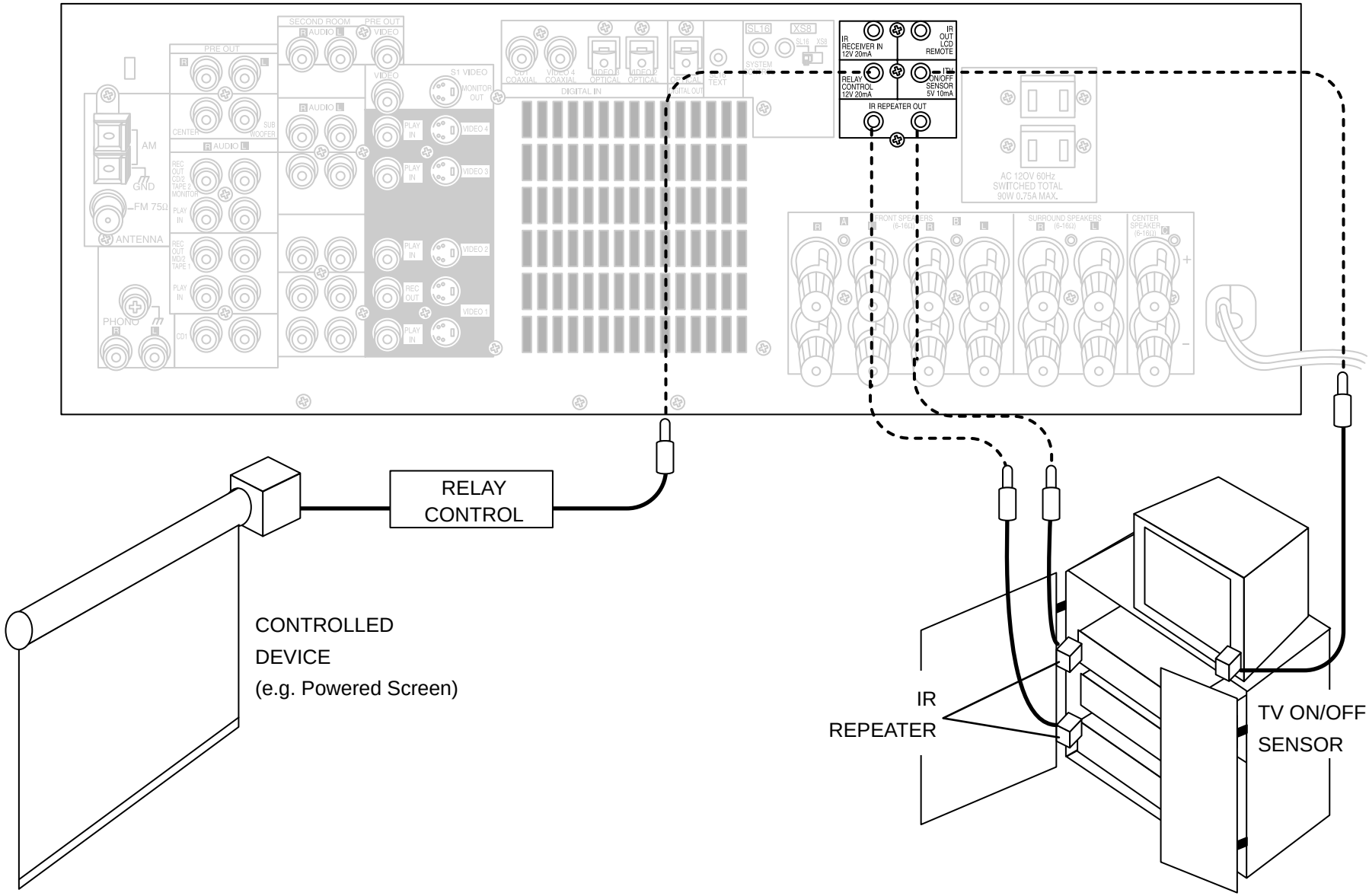

Relay Controls

A relay control enables you to operate external relay-control devices (such as the Xantech 590-0 programmable controller, via Xantech's 599-00 pulse switching module). To connect relay controls:

1. Consult the relay control's manual for compatibility information and installation instructions before connecting it to your new receiver. If you install the control incorrectly or connect an incompatible control to the receiver, you may damage the control *and* your new receiver.
2. Connect the control cable to the receiver's RELAY CONTROL jack. This jack supports a 12V, 20mA signal.

Do not connect multiple 599-00 switching modules to each other or to the receiver, as this can exceed the maximum current capacity of the jack and damage your receiver.

IR Repeaters

IR repeaters enable you to control components located in cabinets or behind glass doors. To connect repeaters:

1. Connect the IR repeater to the device as described in the repeater's manual.
2. Connect the IR repeater cable(s) to the VR-2090's IR REPEATER OUT jack(s).

IR repeaters send a signal similar to the device's own remote control. Xantech repeaters (models 282-00, 286-00, or 283-00) are compatible with your new audio-video receiver.

Do not connect IR repeaters unless you have connected an external IR receiver. (The connections are only active when an IR receiver is connected.)

TV ON/OFF Sensors

A TV ON/OFF sensor enables you to use the Perfect Macro feature (described further in the *Users' Guide*) to accurately sense whether the TV is already on or off and adjust accordingly. To connect an ON/OFF sensor:

1. Connect the sensor to the TV as described in the sensor's manual.
2. Connect the sensor cable to the receiver's TV ON/OFF SENSOR jack. This jack supports a 5V, 10mA signal.

JDS:PSS-TV or NILES:LS-1, APC-2 sensors are compatible with your new receiver.

Setting Up the PowerPad

You can operate equipment from two different zones using your Kenwood PowerPad. To do so:

1. Make sure you have identified all the connected components to your PowerPad. For more information on identifying components, see "Identifying Components For PowerPad Control" on page 35 of this manual.
2. Access the Main Menu and select the Setup tab:

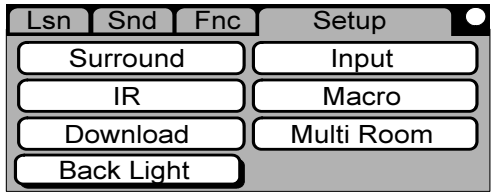

3. Select Multi Room to access multi-room commands:

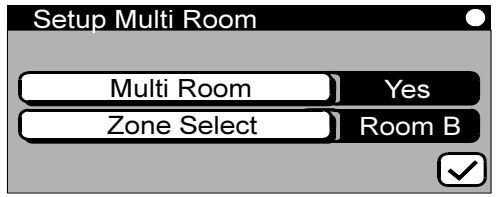

4. Select Multi Room until it reads Yes.

Your PowerPad is now set up to operate components in multiple rooms. Which room it controls depends on which zone you select. For more information on selecting zones, see "How Do I Switch Control Modes?" on page 59 of the *Users' Guide*.

What if I Don't Want to Carry the PowerPad from Zone to Zone?

To make operation of your Zone B equipment easier, Kenwood recommends that you buy a second PowerPad for Zone B use only. For more information on setting the PowerPad to a particular zone, see "How Do I Switch Control Modes?" on page 59 of the *Users' Guide*.

Chapter Four: Warnings and Specifications

Read this page carefully to ensure safe operation.

Warnings

FCC WARNING. This equipment may generate or use radio frequency energy. Changes or modifications to this equipment may cause harmful interference unless the modifications are expressly approved in the instruction manual. The user could lose the authority to operate this equipment if an unauthorized change or modification is made.

NOTE: This equipment has been tested and found to comply with the limits for a Class B digital device, pursuant to Part 15 of the FCC Rules. These limits are designed to provide reasonable protection against harmful interference in a residential installation. This equipment may cause harmful interference to radio communications if it is not installed and used in accordance with the instructions. However, there is no guarantee that interference will not occur in a particular installation. If this equipment does cause harmful interference to radio or television reception, which can be determined by turning the equipment off and on, the user is encouraged to try to correct the interference by one or more of the following measures:

- Reorient or relocate the receiving antenna.
- Increase the separation between the equipment and the receiver.
- Connect the equipment into an outlet on a circuit different from the one that the receiver is connected to.
- Consult the dealer or an experienced radio/TV technician for help.

Note to CATV System Installer: This reminder is provided to call the CATV system installer's attention to Article 820-40 of the NEC that provides guidelines for proper grounding and, in particular, specifies that the cable ground shall be connected to the grounding system of the building, as close to the point of cable entry as practical.

NOTE: Do not use contact cleaning agents because they could cause a malfunction. Be especially careful not to use contact cleaning agents containing oil, since they may deform the plastic components.

Kenwood follows a policy of continuous advancements in development. For this reason, specifications may be changed without notice.

Full performance may not be exhibited in extremely cold locations (below 0 deg. C).

VR-2090 Specifications

Audio Section

Rated Output Power during stereo operation
100 watts per channel minimum RMS, both channels driven, at 6 Ω from 20 Hz to 20 kHz with no more than 0.03% total harmonic distortion (FTC).

Rated Output Power during surround operation
Front
(1kHz, 0.09% T.H.D. at 6 Ω).....100W + 100W
Center
(1kHz, 0.09% T.H.D. at 6 Ω)..... 100W
Surround
(1kHz, 0.09% T.H.D. at 6 Ω).....100W + 100W

Total Harmonic Distortion ..... 0.004% (1kHz, 50W, 6 Ω)

Frequency Response (IHF'78)
CD .....5 Hz~80 kHz, +0.5 dB, -3dB

Signal to Noise Ratio (IHF '66)
Phono (MM).....77dB
CD .....90 dB

Input Sensitivity / Impedance
Phono (MM)..... 2.5mV / 47 kΩ
CD ..... 200 mV / 47 kΩ

Output Level / Impedance
Tape Rec ..... 200 mV /220 Ω
Pre Out (Center, Surround, Subwoofer) ..... 1 V /1k Ω

Tone Control
Bass..... ± 10dB (at 100Hz)
Treble..... ± 10dB (at 10kHz)

Loudness Control
Volume at -40dB level..... +7dB (100Hz), +4dB (10kHz)

Digital Audio Section

Sampling Frequency.....32 kHz, 44.1 kHz, 48 kHz

Input Level / Impedance / Wavelength
Optical..... -15dBm~-21dBm, 660 nm ±30nm
Coaxial.....0.5Vp-p / 75 Ω

Video Section

Video Inputs / Outputs
Video (composite) .....1Vp-p / 75 Ω
S Video (luminance signal).....1Vp-p / 75 Ω
(chrominance signal) .....0.286 Vp-p / 75Ω

FM Tuner Section

Tuning Frequency Range ..... 87.5MHz~108MHz

Usable Sensitivity (Mono)
..... 1.6uV (75 Ω) / 15.2 dBf (75 kHz dev., sinad 30 dB)

50dB Quieting Sensitivity
Stereo ..... 31.6uV (75Ω)/41.2 dBf)

Total Harmonic Distortion (1kHz)
Mono..... 0.3% (65 dBf input)
Stereo ..... 0.6% (65 dBf input)

Signal to Noise Ratio (1kHz, 75 kHz DEV.)
Mono.....75 dB (65 dBf input)
Stereo .....68 dB (65 dBf input)

Stereo Separation (1kHz) ..... 38 dB

Selectivity (± 400 kHz) ..... 70 dB

Frequency Response ..... 30Hz~15kHz, +0.5 dB, -3.0 dB

AM Tuner Section

Tuning Frequency Range
10 kHz step ..... 530 kHz~1,700 kHz

Usable Sensitivity (30% mod., S/N 20 dB) ...16uV / (600 uV/m)

Signal to Noise Ratio (30% mod. 1mV input) .....50 dB

Relay and IR In/Out Section

Relay Control Terminal
Maximum Output Current 20mA
Operating Voltage 12V
Output Impedance .....470 Ω

IR Receiver in Terminal
Maximum Output Current 20mA
Operating Voltage 12V
Output Impedance .....470 Ω

IR Out LCD Remote Terminal
Maximum Output Current ..... 20 mA
Operating Voltage 12V
Output Impedance .....470 Ω

IR Repeater Control Terminals
Maximum Output Current 20mA
Operating Voltage 12V
Output Impedance .....470 Ω

SHAPE OF PLUG TO BE CONNECTED

IR Receiver In, IR Out LCD Remote, and Relay Control	IR Repeater Out
Stereo mini plug	Mono mini plug

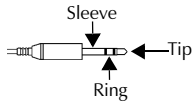

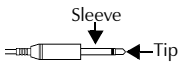

IR In/Out Specification

Terminal	IR Receiver In	IR OUT LCD REMOTE
To Tip	Signal	Signal
To Ring	Ground	----------
To Sleeve	+12V	Ground

Relay Control Specification

Status	Power Off	Power On	Power On and When Switched to Video Input
To Tip	0 V	0 V	+12 V
To Ring	0 V	+12 V	+12 V
To Sleeve	Ground	Ground	Ground

General

Power consumption.....3.5A

AC outlet
Switched ..... 2 (total 90W, 0.75 A max.)

Dimensions .....W: 440 mm (17-5/16")
..... H: 162 mm (6-3/8")
..... D: 391 mm (15-3/8")

Weight (Net) .....12 kg (26.5 lb)

VR-2080 Specifications

Audio Section

Rated Output Power during stereo operation
100 watts per channel minimum RMS, both channels driven, at 6 Ω from 20 Hz to 20 kHz with no more than 0.03% total harmonic distortion (FTC).

Rated Output Power during surround operation
Front
1kHz, 0.09% T.H.D. at 6Ω.....100W + 100 W
Center
1 kHz, 0.09% T.H.D. at 6 Ω..... 100W
Surround
1kHz, 0.09% T.H.D. at 6 Ω.....100W + 100W

Total Harmonic Distortion .....0.004% (1kHz, 50 W, 6Ω)

Frequency Response (IHF'78)
CD .....5 Hz~80 kHz, +0.5dB, -3dB

Signal to Noise Ratio (IHF '66)
Phono (MM) ..... 77 dB
CD .....90 dB

Input Sensitivity / Impedance
Phono (MM) ..... 2.5mV / 47 kΩ
CD ..... 200 mV / 47 kΩ

Output Level / Impedance
Tape Rec ..... 200 mV / 220 Ω
Pre Out (Center, Surround, Subwoofer) ..... 1 V / 1 KΩ

Tone Control
Bass..... ± 10dB (at 100Hz)
Treble..... ±10dB (at 10kHz)

Loudness Control
Volume at -40dB level ..... +7dB (100Hz), +4 dB (10kHz)

Digital Audio Section

Sampling Frequency.....32 kHz, 44.1 kHz, 48 kHz
Input Level / Impedance / Wavelength
Optical..... -15dBm~-21 dBm, 660nm ±30nm
Coaxial.....0.5 Vp-p / 75 Ω

Video Section

Video Inputs / Outputs
Video (composite) .....1 Vp-p / 75 Ω

FM Tuner Section

Tuning Frequency Range .....87.5 MHz~108 MHz

Usable Sensitivity (Mono)
.....1.6uV (75 Ω) / 15.2dBf (75 KHz dev., sinad 30 dB

50dB Quieting Sensitivity
Stereo .....31.6uV (75 Ω) / 41.2 dBf

Total Harmonic Distortion (1kHz)
Mono ..... 0.3% (65 dBf input)
Stereo ..... 0.6% (65 dBf input)

Signal to Noise Ratio (1 kHz, 75 kHz DEV.)
Mono .....75 dB (65 dBf input)
Stereo .....68 dB (65 dBf input)

Stereo Separation (1kHz) ..... 38 dB

Selectivity (±400kHz) ..... 70 dB

Frequency Response ..... 30Hz~15kHz, +0.5 dB, -3.0dB

AM Tuner Section

Tuning Frequency Range
10kHz step.....530 kHz~1,700 kHz

Usable Sensitivity (30% mod., S/N 20dB)
.....16 uV / (600 uV/m)

Signal to Noise Ratio (30% mod. 1 mV input) 50dB

IR In/Out Section

IR Receiver In Terminal

Maximum Output Current 20mA
Operating Voltage 12V
Output Impedance ..... 470 Ω

IR Out LCD Remote Terminal

Maximum Output Current 20mA
Operating Voltage 12V
Output Impedance ..... 470 Ω

SHAPE OF PLUG TO BE CONNECTED:

IR Receiver In, IR Out LCD Remote, and Relay Control	IR Repeater Out
Stereo mini plug	Stereo mini plug

IR IN/OUT Specification

Terminal	IR Receiver In	IR OUT LCD REMOTE
To Tip	Signal	Signal
To Ring	Ground	----------
To Sleeve	+12V	Ground

General

Power consumption 3.5A

AC outlet

Switched ..... 2 (total 90W, 0.75 A max.)

Dimensions ..... W: 440mm (17-5/16″)
..... H: 162mm (6-3/8″)
..... D: 391mm (15-3/8″)

Weight (Net) 11.2kg (24.69lb)

Numerics

200-Disc CD Changer
- connecting ... 15
- connecting SL16 text cable ... 15
- identifying to PowerPad ... 35, 36
- SL16/XS8 switch ... 15

A

AM antenna
- connecting ... 29
- preventing hum interference ... 29

amplifier
- connecting ... 6
- using in multiple zones ... 6

analog cables
- DVD player ... 17
- laser disc player ... 23

antennas, connecting ... 29
audio cables
- 200-Disc CD Changer ... 15
- cable TV ... 11
- camcorder ... 27
- DVD player ... 17
- laser disc player (AC-3 Output) ... 25
- laser disc player (no AC-3 Output) ... 23
- MD recorder ... 19
- primary tape deck ... 19
- satellite tuner ... 11
- second tape deck ... 21
- VCR ... 13, 27

B

batteries, installing in PowerPad ... 30

C

cable radio, connecting (call provider) ... 29
cable TV
- connecting ... 10, 11
- identifying to PowerPad ... 35
- with RCA video output ... 11
- without RCA video output ... 11

cables ... 1, 11
camcorder, connecting ... 27
CD player, connecting ... 14, 15
CD2/TAPE2, setting the input icon ... 36
center speaker, connecting ... 5
chained components, setup codes ... 35
clearing PowerPad stored settings ... 31
coaxial cable
- 200-Disc CD Changer ... 15
- DVD player ... 17

communication cable, connecting ... 14
components
- deleting FutureSet code from PowerPad ... 37
- identifying to PowerPad ... 35, 37, 45
- not on setup codes list ... 36
- operating in multiple zones ... 45

connecting
- 200-Disc CD Changer ... 15
- AM antenna ... 29
- amplifier ... 6
- antennas ... 29
- audio cable to MD recorder ... 19
- audio cables to VCR ... 13
- cable radio (call provider) ... 29
- camcorder ... 27
- CD player ... 14, 15
- DVD player ... 16, 17
- external infrared receiver ... 43
- FM antenna ... 29
- IR repeaters ... 44, 45
- laser disc player with AC-3 Output ... 24, 25
- MD recorder ... 18, 19
- On/Off sensors ... 44
- other primary CD player ... 15
- primary tape deck ... 19
- relay controls ... 44, 45
- second VCR ... 27
- speakers ... 4
- speakers in multiple zones ... 40
- system control cable to primary tape deck ... 19
- tape deck ... 18, 19
- turntable/record player ... 26
- turntable's ground cable to receiver ... 26
- TV ... 8, 42
- TV On/Off sensors ... 45
- VCR ... 12, 13, 27
- video cables to VCR ... 13
- video games ... 1
- video-CD compatible CD player ... 15

connection warning
- analog cables, laser disc player ... 23
- DVD player ... 17
- IR repeaters ... 45
- laser disc player ... 23, 25
- receiver vs. relay controls ... 45
- second CD player ... 21
- second tape deck ... 21

control modes
- mixing connections ... 28
- mixing settings ... 28
- switching between ... 28

customer service toll-free number ... 36

D

deleting
- component with FutureSet code ... 37
- PowerPad setup codes ... 37

digital cable
- CD player ... 14
- DVD player ... 17
- laser disc player (AC-3 Output) ... 25
- laser disc player (no AC-3 Output) ... 23

digital connection warning ... 25
display screen appearance, PowerPad ... 30
Dolby Digital (AC-3) RF Out ... 25
downloading setup codes ... 36, 37
DVD player
- connecting ... 16, 17
- identifying to PowerPad ... 35
- laser disc player and ... 25

E

external infrared receiver, connecting ... 43

F

FM antenna, connecting ... 29
front speakers, connecting ... 5
FutureSet
- definition of ... 36
- deleting code ... 37
- downloading PowerPad setup codes ... 36, 37

G

ground cable, connecting turntable ... 26

H

hum interference ... 29

I

IR repeaters
- connecting ... 45
- connecting and setting up ... 44
- models compatible with receiver ... 45

J

joystick, using ... 31

K

Kenwood customer service toll-free number ... 36

L

laser disc player
- identifying to PowerPad ... 35
- RF Demodulator and ... 25
- with AC-3 Output, connecting ... 25
- with PCM Digital Output, connecting ... 23
- without AC-3 Output, connecting ... 22
- without Dolby Digital Output, connecting ... 23

left speakers
- front, connecting ... 7
- surround, connecting ... 5

M

main menu, navigating ... 32
MD recorder, connecting ... 18, 19
model number for PowerPad ... 36
multiple zones
- connecting IR repeaters ... 40
- connecting relays ... 40
- connecting second TV monitor ... 40
- connecting TV On/Off sensor ... 40
- IR receiver, connecting ... 40
- setup ... 39
- sound scenarios ... 39
- sound setup ... 39
- using external infrared receiver ... 43

N

navigating PowerPad interface ... 31
Next button on PowerPad ... 32

O

On/Off sensors, connecting ... 44
operating range, PowerPad ... 30
optical cable
- DVD player ... 17
- MD recorder ... 19

P

PCM Digital Output laser disc player, connecting ... 23
powered subwoofer, connecting ... 5, 6

PowerPad
200-Disc CD Changer, setup codes 36
CD2/TAPE2, setup code 36
choosing settings on a tab 32
clearing stored settings and reconfiguring 31
deleting setup code 37
display screen appearance 30
downloading new setup codes 36, 37
example of selecting a setting 32
identifying component 37
identifying components 35, 45
identifying receiver model type 31
installing batteries 30
introductory information 30
model number 36
navigating the display screen 31
navigating the main menu 32
need more codes than screen displays ... 37
on/off capabilities 30
operating components not visible 43
operating components through external infrared receiver 43
operating range 30
performing quick setup on speakers 32
replacing old setup code with new 37
selecting main menu tabs 32
selecting model type 31
selecting speakers 33
setup for multiple zone use 45
setup menu 32
speaker distance, setting 34
speaker level, setting 34
speaker type, setting 35
stopping download of new setup codes 36
storing radio stations 37
subsettings 32
subwoofer level, setting 35
time limit for retaining memory settings .. 30
tips to navigating the settings 32
using joystick 31
using outside of range 30
zone B use 45

Q

quick setup (speakers) 32

R

radio stations, storing in memory 37
RCA audio cables 7
RDS stations, storing in PowerPad 37
receiver
connection warning 45
identifying model type to PowerPad 31
warning, damage from sunlight 30
record player/turntable, connecting 26
relay controls
connecting 44, 45
connection warning 45
right speakers
front, connecting 7
surround, connecting 5

S

S video cable
cable TV 10
DVD player 16
laser disc player 22, 24
satellite tuner 10
VCR 12
satellite tuner
connecting 10, 11
identifying to PowerPad 35
second tape deck
connecting 21
connecting audio cable 21
connection warning 21
identifying to PowerPad 35
second VCR
connecting 27
identifying to PowerPad 35
setting, using PowerPad to select (example) 32
setup codes
chained components 35
component not on list 36
deleting 37
downloading new codes 36
need more than screen displays 37
none from list are working 36
stopping download 36
setup menu, on PowerPad 32
SL16
200-Disc CD Changer 15
chained connections 28
system control mode 28
XS8 switch, 200-Disc CD Changer 15
sound scenarios
zone A 39, 41
zone B 39, 41
speakers
connecting 4, 40
connecting in multiple zones 40
setting with PowerPad 35
specifications and warnings 46
storing radio stations in memory 37
subwoofer
connecting 5
setting level with PowerPad 35
super video 8
supplemental power amplifiers, connecting 7
surround sound
connecting speakers 5
multiple zones 40
system control cables
200-Disc CD Changer 15
CD player 14
connection warning 28
laser disc player 23, 25
MD recorder 19
PowerPad setup codes for components ..35
tape deck 19
system control chaining 15, 28

T

tape deck
connecting 18, 19
identifying to PowerPad 35
turntable/record player, connecting 26
TV
connecting 9
identifying to PowerPad 35
On/Off sensors, connecting 45
watching without using receiver 9

V

VCR
connecting 12, 13
identifying to PowerPad 35
video cables
another VCR 27
camcorder 27
DVD player 17
laser disc player (AC-3 Output) 25
laser disc player (no AC-3 Output) 23
satellite tuner 11
satellite TV 11
TV 9
VCR 13
video CD-compatible CD player, connecting ..15
video game, connecting 1

W

warnings and specifications 46

X

XS8 chained connections, example of chained components 28

Z

zone A
sound scenario 39
surround sound 39
zone B
connecting second TV 42
sound scenario 39
surround sound 39, 42